Computer Numeric Control

OPTIMUM®

MASCHINEN - GERMANY

CNC metal working machinery

The OPTIMUM in terms of quality, price-performance and service

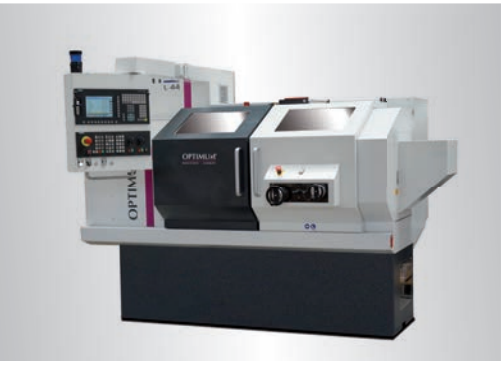

CNC catalogue 2016/17

More than 345,000 machines and accessories are available for delivery from stock at our Logistics Centre. This allows for fast shipment of almost all of our products to Germany and throughout Europe. Qualified staff ensure the orderly delivery of the goods. Every year, more than 120,000 consignments leave the company‘s premises – with our own delivery vehicles, by carrier, or by parcel service.

Dear Customers,

To support any conceivable metalworking application, we have composed an assortment in our OPTIMUM domain catalogue that covers all areas with suitable machines. One thing you can be assured of is that each one of our products impresses with its quality, precision and value stability. For most activities OPTIMUM offers the right machine - from bench tools through to CNC lathes.

Your requirements are our target

For more than 25 years, we have focused on the design, development and production of OPTIMUM machines. We work unceasingly on continually optimising our machines. One important point here is also production, which is of great importance to us. This is why we made a careful choice of manufacturers to supplement our own production facilities. We set great store by the fact that these manufacturers meet our internal quality requirements: in addition to our own production facilities, we manufacture exclusively with manufacturers who meet our requirements. This means that we can offer you metalworking machines that impress on many scores.

OPTIMUM has built up a good reputation in the course of the years on what is a continually changing and developing tool and machine market. We are proud to say that we combine expertise, experience and a balanced price-performance ratio. Our utmost priority is you as a satisfied customer. With our motivated and skilled employees, we’re working to complete the OPTIMUM know-how and carry it outside – to you, our customers.

On-site for you: in Europe and worldwide

For many years, OPTIMUM Maschinen Germany has been synonymous with the development, design and production of metalworking machines and CNC machines characterised by high quality standards. In the course of the years, we have continually expanded our sales and service network.

Today, OPTIMUM Maschinen Germany GmbH, German company, collaborates globally with professional partners from its headquarters in Hallstadt near Bamberg:
You will find OPTIMUM subsidiaries with strong dealers. Our international sales network extends well beyond Germany's borders to many countries all over the world. This helps us to ensure that our customers can rely on the fast, uncomplicated and service-oriented expertise and quality standards of OPTIMUM thanks to our extensive sales organisation. We have established a responsible market position that you can trust in the course of the years!

Kilian Stürmer
Chief executive

Planning

As early as the planning phase our engineering department manages the development of new products, which are manufactured both our facility and facilities operated by our partners. Major benefits: this ensures that market factors and customer requirements are immediately adopted into our workflow, setting the stage for a successful product design.

Our Engineering department has a well-coordinated team of specialists with excellent engineering qualifications. Their established expertise allows flexible and creative implementation of all requirements posed for our products and services.

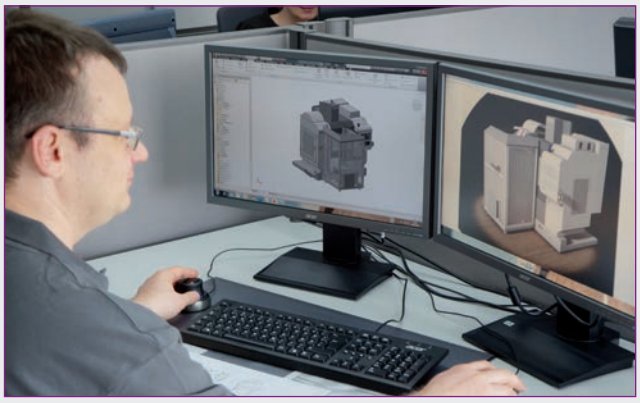

Development

Development relies exclusively on state-of-the-art 3D CAD software, which we use to create a virtual model of the machine. Besides ensuring optimum functionality of the machines, our development process also targets re-usability of the data generated during the development phase. These data are not only used for devising production documents and manuals, but are also used for computations, for computer-aided manufacturing, and for visualisation and animations.

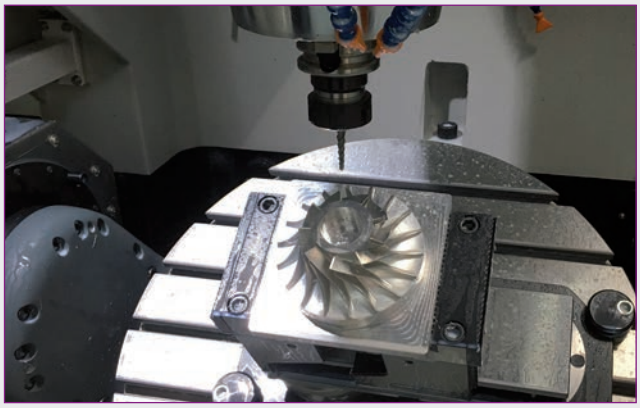

Practical testing

Our engineers combine theory and practice. To avoid leaving anything to chance in terms of product satisfaction, all of our machines and tools go through application engineering tests, and we also consistently involve selected customers in this process. This means that each new product is expected to prove itself in the daily grind before it comes a fixed part of our product range. Engineering analysis helps us to discover and eliminate any remaining weak points.

LIEFERANTENBETREUUNG

Regelmäßige Arbeitsgespräche zwischen unseren Technikern und den Lieferanten tragen dazu bei, unsere Neu- und Weiterentwicklungen zielgerichtet in die Serienfertigung am Herstellungsort zu übermitteln. Diese direkte Betreuung unseren Fertigungsstätten ist unerlässlich, um die Qualitätsprodukte herzustellen, denen unsere Kunden nun seit mehr als 25 Jahren vertrauen.

The clearly engineering oriented approach of our staff – in addition to the premium quality of our products, and our expert service – contributes towards constantly high levels of customer satisfaction.
And our focus on technically affine employees ensures our market success – today and looking forward!

Safeguarding copyrights

To secure the rewards of our technical development work for both ourselves and our customers, patent and utility model protection is essential for our in-house developments. This helps us permanently keep the technical lead that OPTIMUM products have.
The entire catalogue is protected by copyright. Additionally, to protect our products, we register our rights to our brands, patents and designs where possible in each individual case. We take strong action against any violation of our intellectual property.

Technical documentation and risk analyses

Our technical authors again achieve a high standardised level that meets or even exceeds all requirements. These huge efforts exclusively serve the purpose of facilitating the process of familiarisation with the machine for our customers, and ensuring permanent and safe operations.
Risk mitigation measures are developed to compensate for any safety risks identified in the scope of analysis. Following this, the residual risk is evaluated after implementing the measures.

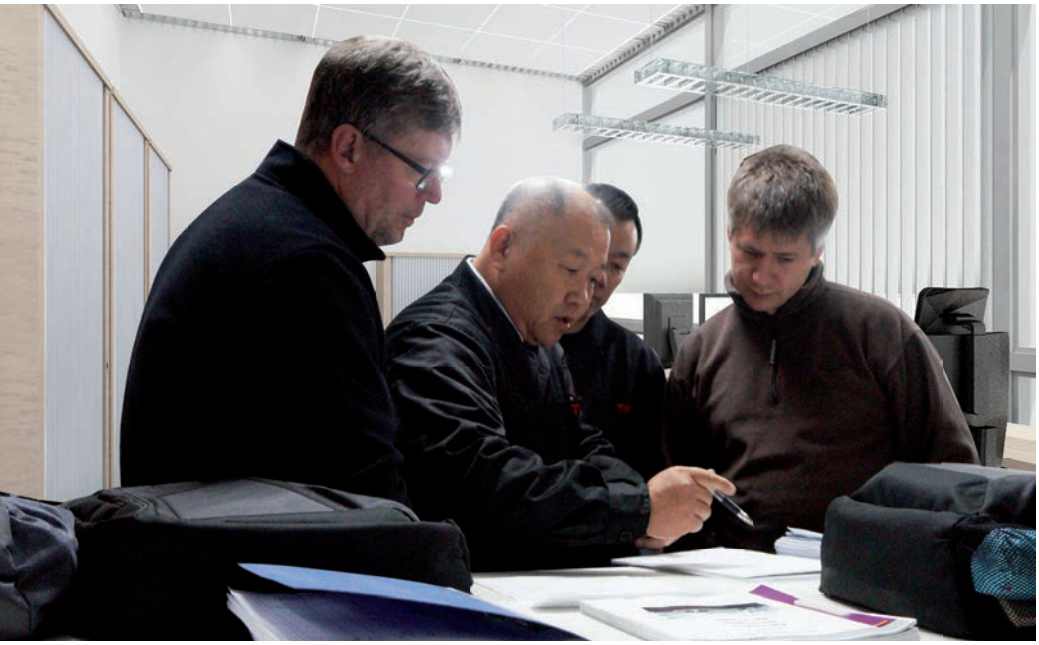

Production support

A team of employees directly influences the production process on site through regular training and checks. It is only through this intensive support at the production site that we are in a position to achieve the proverbial OPTIMUM.

Quality management, production and incoming goods inspection

In addition to adherence to delivery deadlines and service, the quality of our products is extremely important to us. Continuous on-site checks by our quality manager ensure our quality. Our comprehensive incoming goods inspection is performed in line with generally accepted technical guidelines.

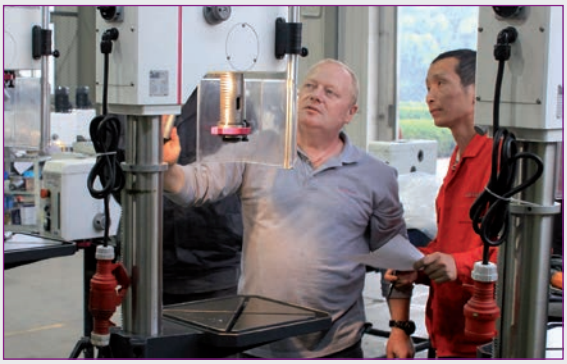

Quality management
incoming goods inspection

Our quality managers from Germany are our first contacts for quality compliance on site. The quality managers are responsible for dimensional precision of the components, for validating this precision, and the quality of the production process. The quality manager collaborates closely with our Engineering department at head office in Germany, thus ensuring an optimal symbiosis.

DIN EN ISO 9001

Excellent quality

OPTIMUM Yanghzou is DIN EN ISO 9001 certified. This means that all company departments and services are subject to strict quality requirements.
And this means consistently high quality for you. The objective of high quality is thrilled customers. And it is this attitude that finally helps to achieve this demanding certification. The key to the long-term success of our enterprise is also a relationship of trust with customers and suppliers. This explains why it is just as important to us as the sustainable quality of our products.

PRE-SALES-SERIVICE

Im Pre-Sales-Service erarbeiten Ihnen unsere CNC Experten und Verkäufer individuelle Maschinen- und Servicelösungen. In engem Kundenkontakt analysieren unsere Pre-Sales Mitarbeiter die Anwendungsgebiete um die Bedürfnisse klar zu erkennen.
Unsere aussagekräftige, detaillierte Produktinformationen erleichtern es Ihnen, Ihre „Wunschmaschinen“ zu finden.

AFTER-SALES-SERIVICE

Our After-Sales service offers you both hotline support and support on-site from specially trained staff.
Whether planned service or fast help after a sudden machine failure, our intensively trained OPTIMUM service engineers are ready to help you with their many years of experience. They quickly and reliably take care of repairing your CNC machines. With our carefully considered service solution we help to keep your OPTIMUM CNC machine working in a trouble-free way.

Know-how for satisfied customers:
Our Engineering department has a well-coordinated team of specialists with excellent engineering qualifications. We view the clear, technical orientation of our staff as the basis for a high level of customer satisfaction.

This is what you can expect of us:
- Fast and comprehensive advice
- Expert on-site service
- Reliable help for maintenance, repairs and interruptions

DELIVERY AND TRANSPORT TO INSTALLATION SITE

Punctual delivery by our fleet of vehicles guarantees prompt and safe delivery of your machine. On request, we also offer complete solutions including delivering your machine to the final machine site.

EVERYTHING FROM A SINGLE SOURCE

The complete solution

Choose your from machine tool from our versatile and comprehensive portfolio. Our versatile range of accessories, as well as machines and equipped specially designed for workshops, round off our offering.

Proximity to customers is our main focus; after all, buying machines is a matter of trust. Due to the variety of machines and their technical complexity, being able to rely on specialist retail partners with their advice and practical help is essential.

Whether on the phone, or wherever our customers are, our specialists from the fields of woodworking, welding technology, compressed air technology or metalworking are always there on request to provide advice and support whenever the need arises.

TRAINING

Our training give your productivity some real momentum. The success will become visible in your company after a very short period of time. In CNC training we rely on professional programming, efficient setting up and operation of your OPTIMUM machines with SIEMENS control. Practical teaching of the training content by qualified and didactically certified CNC trainers and personal tuition in small groups guarantee that you will attain the highest levels of learning success with our support.

Increased productivity thanks to shorter machine integration or reduced programming and set-up times. Efficient programming and minimisation of operating errors

EQUIPMENT FOR SPECIAL-PURPOSE FACILITIES

We know what is important

In collaboration with the Dr.-Ing. Paul Christiani GmbH & Co. KG - Technisches Institut für Aus- und Weiterbildung (Technical Institute for Education and Training) - which has played an active role in education for more than 80 years, we plan and implement your entire special-purpose facility.
Whether you are looking to extend an existing special-purpose facility, or set up a new one, OPTIMUM Maschinen and Christiani are your partners for planning and implementing workrooms and laboratories for technical education and training, and naturally also for your production operations.

With our expertise, we will find a solution for your requirements.

Our services in cooperation with Christiani:

- Analysis of requirements
- Planning and consultancy
- Conceptualisation
- Implementation

www.christiani-fachraum.de

CNC MACHINE SERVICE

Qualified CNC technicians offer you both the latest updates for your SIEMENS CNC control, and customer-specific adaptation and optimisation of your CNC machine tools, supported by measuring systems by RENISHAW or clamping systems by SCHUNK

SIEMENS CONTROL

The right control for every machine.

Controls for machine tools need to be easier to use, capable of solving more complex tasks, quickly and precisely.
We offer the right choice of SIEMENS control for any application. Premium, perfectly matched CNC machines combined with the right choice of SIEMENS control.
Each of our CNC machines meets specific requirements in terms of output, speed, control, robustness or IP degree of protection. We always offer you the right choice – with flexible, efficient and reliable SIEMENS controls.

Our machines are not fitted with unnecessarily large and expensive controls which you do not need for your application.

This helps you save cash

TWO-STAGE DISTRIBUTION SYSTEM

PRODUCTION OF CNC MACHINES FOR TRAINING AND TRADES

OPTi mill®
OPTi turn®

SIEMENS controls
SINUMERIK 808D
SINUMERIK 808D ADVANCED

Our customers are important to us

To implement these goals in the best possible way, we liaise directly with the customer. This proximity puts in a position to identify strategic issues in good time and find the right response. Thanks to decades of experience, high quality and reliability in manufacture and delivery, we can guarantee mature engineering to our customers.

Our engineers in Germany plan and develop new and innovative CNC machines driven by the experience of our customers. Always with the premise of optimising machines and existing solutions down to the final detail. Our products are manufactured at the OPTIMUM factory in Yangzhou China.
To monitor the quality process end-to-end, are machines are first accepted by our expert CNC team when they arrive in Germany. An OPTIMUM CNC machine is not delivered to the customer until strict checks have been completed.

We also manufacture our own CNC machines.

The OPTIMUM machine factory in China is the first to put our new developments through their paces. Due to the wide variety of tasks in manufacturing drilling and milling machines, and lathes of all types, the required performance spectrum is unrivalled. We do not release the newly developed CNC machines for sale on the market until they have been successfully deployed in our OPTIMUM factory. Because we constantly use our own machines, we are continually discovering new approaches and potentials for improvement.
The CNC machines on the market right now have a level of maturity that reflects the current state of the art.

TWO-STAGE DISTRIBUTION SYSTEM

PRODUCTION OF CNC INDUSTRIAL MACHINES

OPTI mill®
OPTI turn®

SIEMENS controls
SINUMERIK 828D
SINUMERIK 840D sl
SINUMERIK 828D Basic T

PREMIUM

Many factors are involved in the production of OPTIMUM Premium CNC machines, which are required to thrive in the harsh environment of three-shift operations.
Our partner company has more than 35 years‘ experience in the CNC field and thus offers the best possible conditions for meeting the requirements of the market in collaboration with us.

Our end customers‘ experiences are analysed by our CNC specialists. This information is adopted into the production process. While doing so, we also influence the most important components of each machine. Of course, only brand-name components by manufacturers of international repute are used for our machines. In the sensitive area of industrial bearings, linear guides, rotating spindles and main spindles in particular, we set great store by meeting the continually increasing requirements of the market

This is what characterises our machines and sets us apart from our competitors.

OPTIMUM customers are guaranteed requirements-driven stock levels, delivery capability and short-term availability of all required replacement and wear parts. Thanks to an on-going training process, the CNC team both guarantees orderly processing of repairs or maintenance, while at the same time training your staff for future tasks. We spell Service with a capital S.

We have a spacious demonstration area at our company headquarters in which we are happy to demonstrate our product program to you.
And our demonstration area offers the perfect environment to discuss machine technology in detail. Expert customer advisors are happy to guide you through the Optimum Maschinen universe and find the ideal solution for your individual requirements for the perfect CNC machine.

COOPERATION PARTNER FOR CNC TRAINING IN BAVARIA

A strong team

Siemens has for many years been the system supplier of the control and drive technology for CNC-controlled lathes and milling machines by OPTIMUM Maschinen Germany GmbH. Due to our long-standing and successful collaboration, a cooperation partnership for CNC training in Bavaria was agreed in June 2012.

Target-group specific courses familiarise the participants of the training program with the various Sinumerik controls.

Optimum uses CNC machines with the Sinumerik controls 828D, 802S and 808D for this. And the training offerings also include the "Sinumerik Operate" software with work step programming "ShopMill" and "ShopTurn". The machine operators learn rapid NC programming, work preparation and intuitive software handling. OPTIMUM Maschinen Germany GmbH trainers, who are Siemens-certified, train your employees either directly at their workplaces or at OPTIMUM headquarters in Hallstadt near Bamberg.

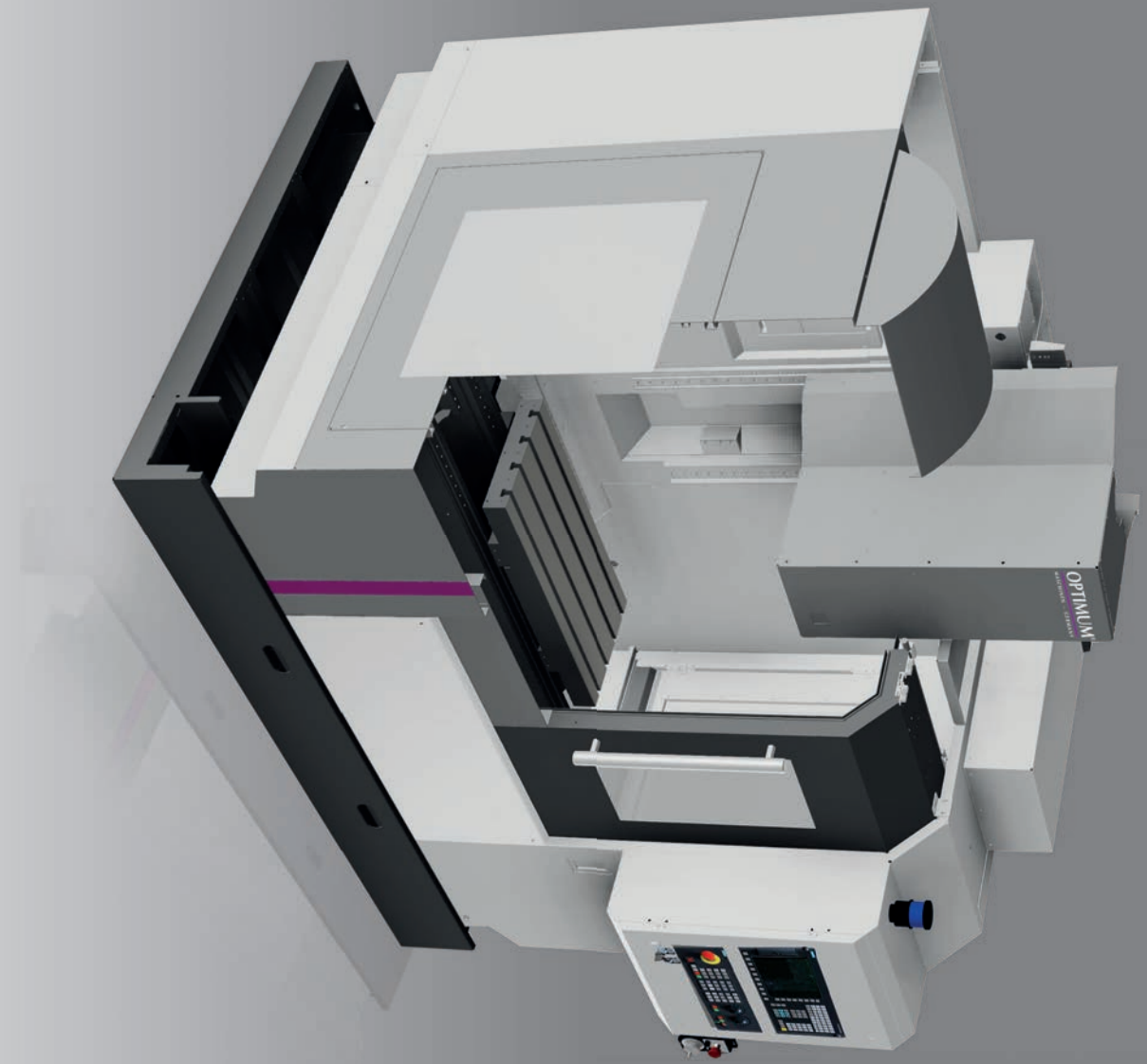

CNC milling machines

OPTimill® F 3

Compact CNC milling machine with servodrives.
Quality, power and precision characterise this state-of-the-art universal milling machine

- Linear guides on all axes
- All axes with ball screws
- Servodrives on all axes
- Tool change at the push of a button (electropneumatic tool clamping device)
- Coolant system
- Central lubrication
- Swivelling control panel
- Software package "SINUMERIK 808D on PC" included. (Practical training software allowing workpieces to be programmed and simulated on a PC offline. Download for free on www.cnc4you.com)
- Two-year SIEMENS warranty included

SIEMENS control

SINUMERIK 808D

Information "SINUMERIK 808D" on page 104

Cable routing
- in an energy chain

Work area
- Clearly visible from three sides
- Clear, resilient Makrolon panes

Signal lamp

Connections
- For easy access
- Easy to connect to the machine
- Socket
- USB
- RS232

Handwheel
- Electronic
- Portable
- Substantially facilitates running in of programs
- Emergency stop button
- Confirm button

Fig. F 3

"CNC introductory training" on page 100

The CNC-machine complies with standard DIN EN 55011: class C1 (Use only in industrial areas)

Model	F 3
Article no.	3500410
Machine data	
Electrical connection	400 V / 3 Ph ~50 Hz
Total connected load	3.125 KVA
Milling spindle	
Drive motor	1.5 kW
Drive motor torque	10 Nm
Spindle taper	BT 30
Cooling lubricant system	
Motor	95 W
Tank capacity	50 litres
End mill size	
Max. sensor head size	Ø 40 mm
Max. shaft milling cutter size	Ø 25 mm
Precision	
Repetition accuracy	± 0.025 mm
Positioning accuracy	± 0.025 mm
Strokes	
X axis	355 mm
Y axis	190 mm
Z-axis	245 mm
Servomotors/rapid motion torque	
X/Y/Z axis	10,000 mm/min.
Speed range	
Speeds*	200 - 4,000 rpm
Milling table	
Clearance spindle to table	20 - 305 mm
Table length x width	620 x 180 mm
T-slot size/amount/distance	12 mm / 3 / 50 mm
Max. load	30 kg
Air connection	
Connection	8 bar
Dimensions	
Length x width x height	1,600 x 1,445 x 2,010 mm
Overall weight	1,400 kg

Dimensions

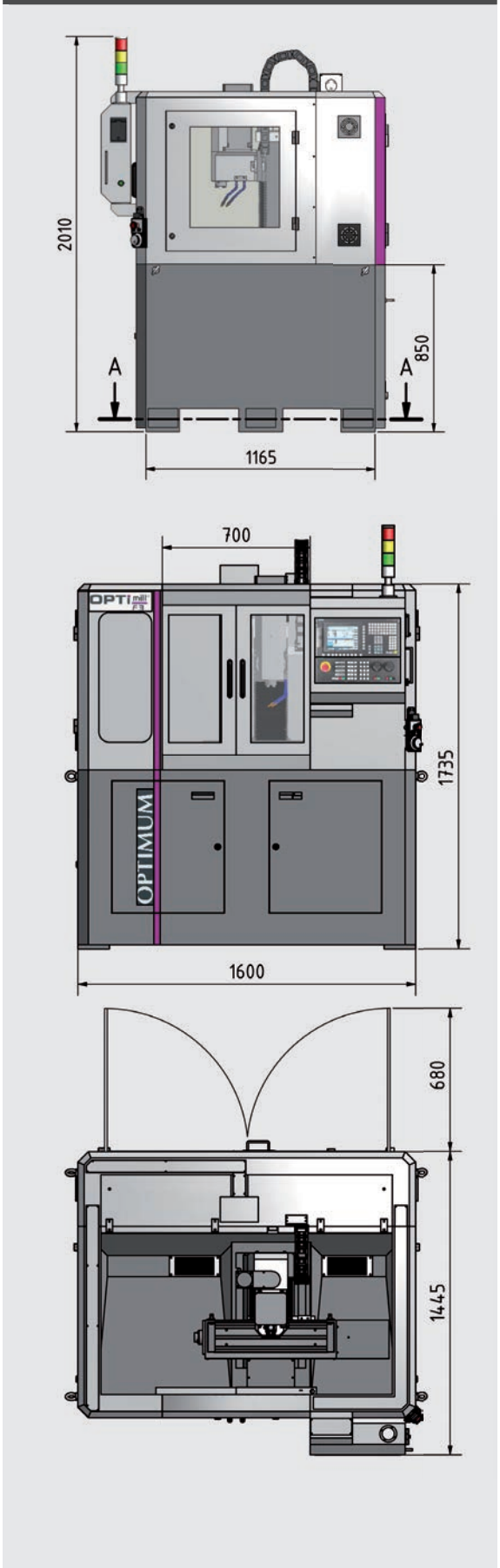

Starter set BT 30	3536107
Comprises:	
1 pc. milling head holder	
1 pc. chuck	
2 pcs. Weldon 6 mm	
1 pc. Weldon 8 mm	
1 pc. Weldon 10 mm	
1 pc. Weldon 12 mm	
1 pc. Weldon 16 mm	
2 pcs. Weldon 20 mm	
1 pc. adapter BT 30	
3 pcs. collet chuck ER 32	
1 pc. spanner ER 32	
18 pcs. collet ER 32	
1 pc. height adjuster	
1 pc. assembly and tool adjustment gauge	
14 pcs. pull studs	
1 pc. taper wiper	
"Starter set BT 30" on page 118	

NEW

Renishaw PRIMO Set	9001034
Comprises:	
Tool Tool probe Radio Part Setter	
Tool Tool probe Radio 3D Tool Setter	
Primo Interface	
GoProbe Software	
Collet BT 30	
License for six months	

"Renishaw Primo Set" on page 123

* Please note that the maximum spindle speed has to be reduced by approximately 20% in continuous operation

OPTImill® F 80

State-of-the-art, powerful and easy-to-operate tool machine Ideal for part production, prototype and jig building.

- Main spindle drive with servomotor
- Servodrives on all axes
- Machine with cast stand design for good stiffness values
- Carousel tool changer with ten tool slots
- With max. spindle speed up to 8,000 rpm as standard
- All linear guides with stainless steel covers
- Automatic centralised lubrication
- Integrated machine lamp
- Integrated coolant unit with 160 litre coolant tank
- Tool change occurs automatically or at the push of a button (electropneumatic tool clamping device)
- Solid, precision milling table, generously dimensioned with precision surface finish
- Access doors very generously designed to reduce cleaning and maintenance times to a minimum
- Clear-cut switch cabinet
- LED machine lamp completely illuminates the workspace
- Software package "SINUMERIK 808D on PC" included. (Practical training software allowing workpieces to be programmed and simulated on a PC offline. Download for free on www.cnc4you.com)
- Two-year SIEMENS warranty included

SIEMENS control
SINUMERIK 808D

Information "SINUMERIK 808D" on page 104

"CNC introductory training" on page 100

Fig. with optional accessories

The CNC-machine complies with standard DIN EN 55011: class C1 (Use only in industrial areas)

Model	F 80
Article no.	3501080
Machine data	
Electrical connection	400 V / 3 Ph ~50 Hz
Total connected load	12 KVA
Milling spindle	
Drive motor	2.2 kW
Drive motor torque	14 Nm
Spindle taper	BT 30
Cooling lubricant system	
Motor	650 W
Tank capacity	160 litres
Spindle taper	
Max. sensor head size	Ø 65 mm
Max. shaft milling cutter size	Ø 30 mm
End mill size	
Repetition accuracy	± 0.015 mm
Positioning accuracy	± 0.015 mm
Tool changer	
Number of tool slots	10 tools
Max. tool diameter	104 mm
Max. tool length	300 mm
Max. tool weight	6 kg
Tool change time	7 seconds
Strokes	
X axis	400 mm
Y axis	225 mm
Z-axis	375 mm
Axis feed drive	
Rapid motion X, Y, Z axis	10,000 mm/min.
Servomotor torque	
X axis	5 Nm
Y axis	5 Nm
Z-axis	6 Nm
Speed range	
Speeds*	50 - 8,000 rpm
Pneumatic system	
Air pressure	7 bar
Milling table	
Clearance spindle to table	75 - 475 mm
Table length x width	800 x 260 mm
T-slot size/amount/distance	16 mm / 5 / 50 mm
Max. load	150 kg
Dimensions	
Length x width x height	1,925 x 1,655 x 2,070 mm
Overall weight	1,900 kg

Starter set BT 30	3536107
Comprises:	
1 pc. milling head holder	
1 pc. chuck	
2 pcs. each Weldon 6 / 20 mm	
1 pc. each Weldon 8 / 10 / 12 / 16 mm	
1 pc. adapter BT 30	
3 pcs. collet chuck ER 32	
1 pc. spanner ER 32	
18 pcs. collet ER 32	
1 pc. height adjuster	
Assembly and tool adjustment gauge	
14 pcs. pull studs	
1 pc. taper wiper	
"Starter set BT 30" on page 118	

NEW

Renishaw PRIMO Set	9001034
Comprises:	
Tool Tool probe Radio Part Setter	
Tool Tool probe Radio 3D Tool Setter	
Primo Interface	
GoProbe Software	
Collet BT 30	
License for six months	

"Renishaw Primo Set" on page 123

* Please note that the maximum spindle speed has to be reduced by approximately 20% in continuous operation

Abmessungen

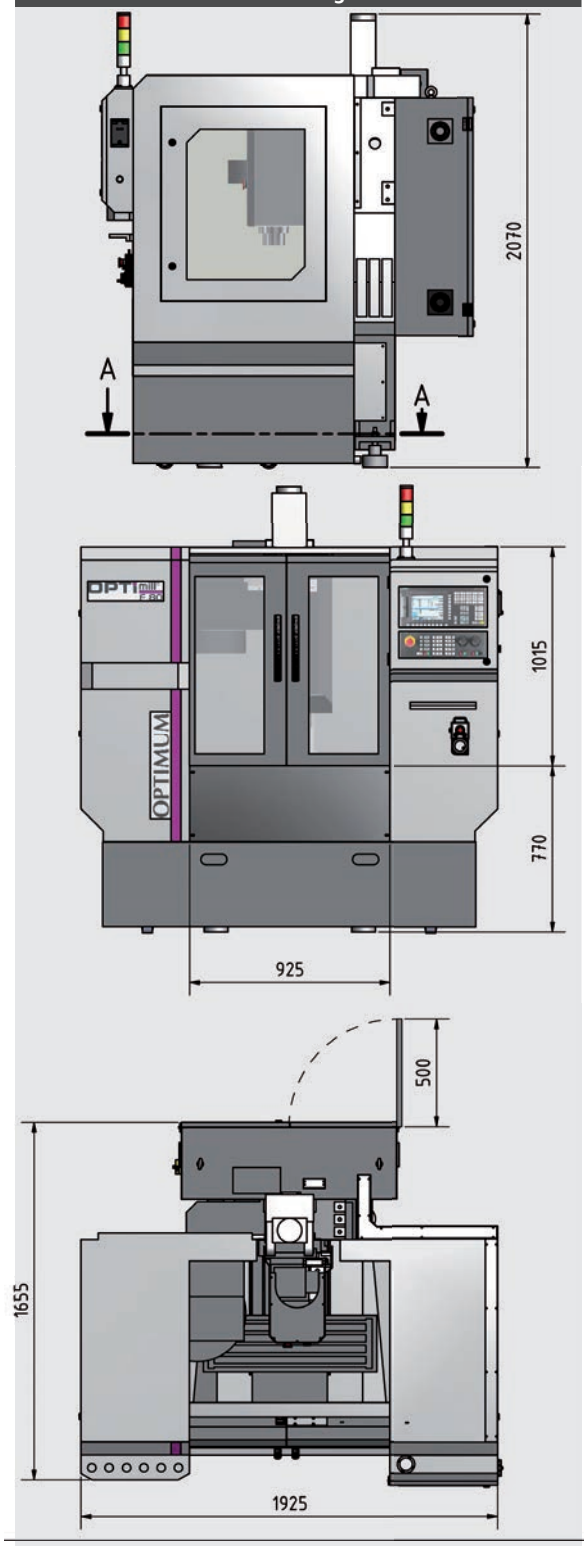

More information for F 80 in our video presentation on Optimum Maschinen YouTube channel

OPTimill® F 105

The compact solution for small batch production in SMEs

- Rugged design
- Main spindle drive with servomotor
- Carousel tool changer with 12 tool slots
- With max. spindle speed up to 8,000 rpm as standard
- All linear guides with stainless steel covers
- Automatic centralised lubrication
- Integrated machine lamp
- Portable electronic handwheel with confirm button and Emergency stop button. Substantially facilitates running in of programs
- Integrated coolant unit with 200 litre coolant tank
- Tool change occurs automatically or at the push of a button (electropneumatic tool clamping device)
- Solid, precision milling table, generously dimensioned with precision surface finish
- Access doors very generously designed to reduce cleaning and maintenance times to a minimum
- SIEMENS servodrive on the X, Y and Z axis
- Software package "SINUMERIK 808D on PC" included. (Practical training software allowing workpieces to be programmed and simulated on a PC offline. Download for free on www.cnc4you.com)
- Two-year SIEMENS warranty included

SIEMENS control

SINUMERIK 808D
or
SINUMERIK 808D ADVANCED

Advantages: SINUMERIK 808D ADVANCED
- Control circuit
- RJ-45 connector
- Preparing for remote maintenance
- AST function; enables easy optimization at higher demands on the dynamics and accuracy
- Absolute Encoder
- Higher accuracy

Information "SINUMERIK 808D" on page 104
Information "SINUMERIK 808D ADVANCED" on page 106

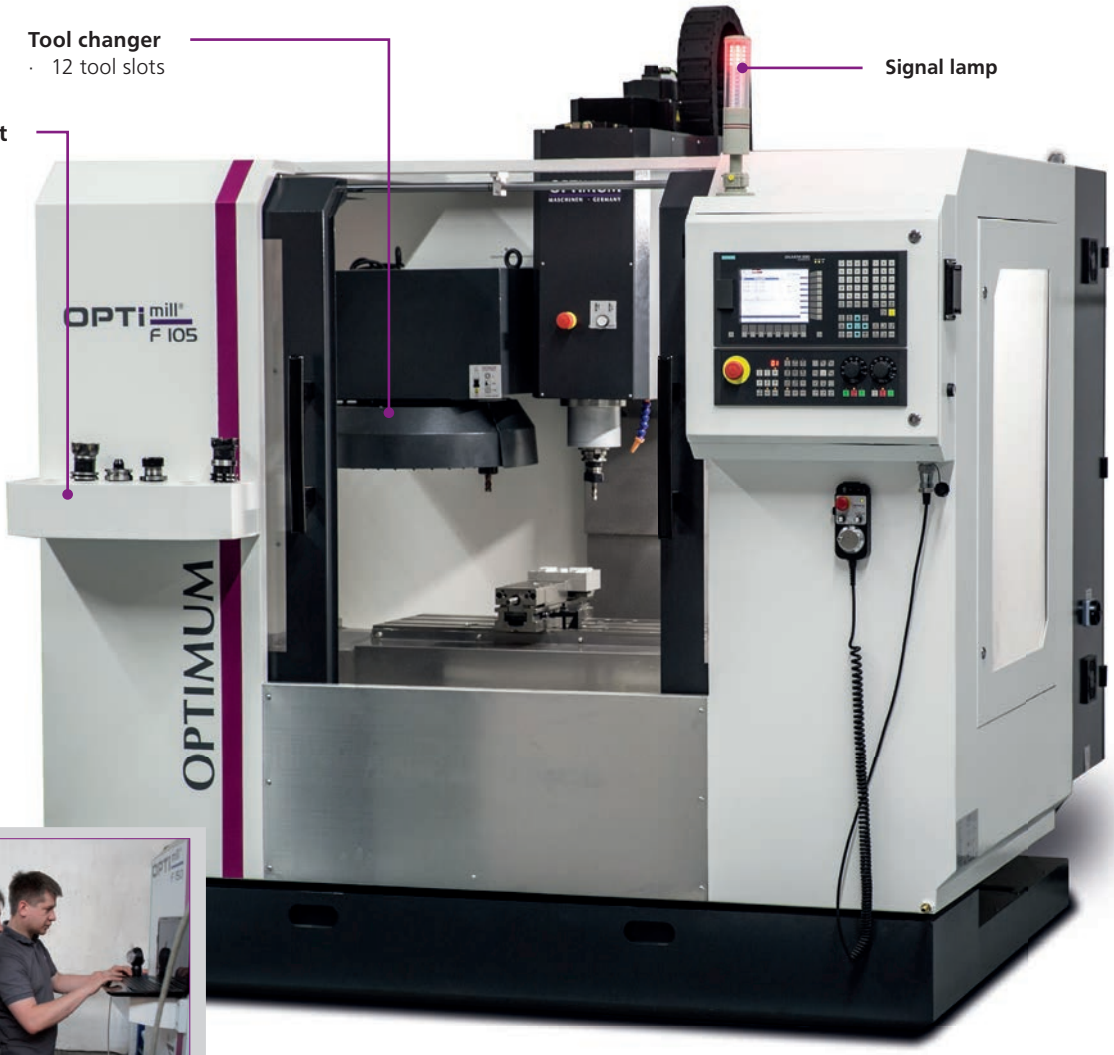

Fig. with optional accessories

"CNC introductory training" on page 100

The CNC-machine complies with standard DIN EN 55011: class C1 (Use only in industrial areas)

Model	F 105
SINUMERIK 808D Standard	3501105
SINUMERIK 808D ADVANCED Option	3501100
Machine data	
Electrical connection	400 V / 3 Ph ~50 Hz
Total connected load	12,5 KVA
Milling spindle	
Drive motor	5.5 kW
Drive motor torque	35 Nm
Spindle taper	BT 40
Cooling lubricant system	
Motor	650 W
Tank capacity	200 litres
Spindle taper	
Max. sensor head size	Ø 75 mm
Max. shaft milling cutter size	Ø 35 mm
End mill size	
Repetition accuracy	± 0.01 mm
Positioning accuracy	± 0.01 mm
Tool changer	
Number of tool slots	12 tools
Max. tool diameter	104 mm
Max. tool length	300 mm
Max. tool weight	6 kg
Tool change time	7 seconds
Strokes	
X axis	550 mm
Y axis	305 mm
Z-axis	460 mm
Axis feed drive	
Rapid motion X, Y, Z axis	10,000 mm/min.
Servomotor torque	
X axis	5 Nm
Y axis	5 Nm
Z-axis	10 Nm
Speed range	
Speeds*	10 - 8,000 rpm
Pneumatic system	
Air pressure	7 bar
Milling table	
Clearance spindle to table	100 - 600 mm
Table length x width	800 x 320 mm
T-slot size/amount/distance	14 mm / 3 / 100 mm
Max. load	300 kg
Dimensions	
Length x width x height	2,164 x 1,860 x 2,200 mm
Overall weight	2,800 kg

Dimensions

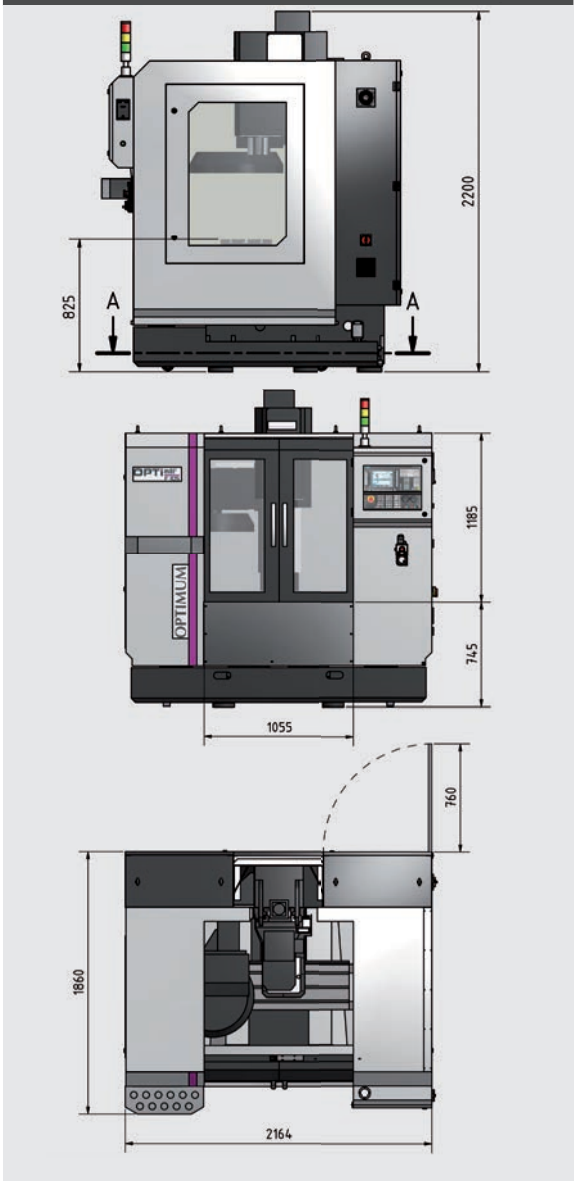

Accessories	Article no.
Starter set 1 BT 40	3536105
Information "Starter set BT40 / Set 1" on page 119	
Starter set 2 BT 40	3536108
Information "Starter set BT40 / Set 1" on page 119	
NEW **Renishaw PRIMO Set**	9001035
· Tool Tool probe Radio Part Setter · Tool Tool probe Radio 3D Tool Setter · Primo Interface · Collet BT 40 · GoProbe Software · License for six months	
Information "Renishaw Primo Set" on page 123	

* Please note that the maximum spindle speed has to be reduced by approximately 20% in continuous operation

More information for F 105 in our video presentation on Optimum Maschinen YouTube channel

SPECIAL EQUIPMENT only with SINUMERIK 808D ADVANCED	
Fourth axis complete kit	3501120
 Can only be ordered ex works	
Including:	Three-jaw lathe chuck 125 mm Tailstock, Assembly

OPTImill® F 150

PREMIUM line

The OPTIMUM PREMiUM CNC milling machine is characterised by its excellent precision, solid design, effectiveness and efficiency

- Heavy duty version
- High productivity
- High reliability
- Linear guide for fast rapid motion speeds on all axes
- High-torque servodrives on all three axes, mounted directly on the ball screws
- Precision ground, prestressed, high-performance ball screws (Ø 32 mm x P8 x C3) on all axes
- Option of carousel tool changer with 16 tool slots, are double arm grab tool changer with 24 tool slots
- Torsion free machine base thanks to strong ribbing
- Quality meehanite cast body
- Solid, precision milling table with four T-slots, generously dimensioned with precision surface finish
- Chip conveyor, screw auger type
- RJ45 plug-in connection, USB connection and power connection 230 V
- Integrated coolant unit with 210 litre coolant tank and chip flushing system
- Closed cabinet with integrated heat exchanger; optimal temperature even in case of high ambient temperatures; prevents dirt particle penetration
- Telescopic guide rail covers on all three axes
- Two-year SIEMENS warranty included
- "Warranty extension" on page 110

INCLUDING

Safety integrated (see page 96)
Residual material detection
ShopMill work step programming
Managing network drives
3-D simulation
Simultaneous recording

SIEMENS control
SINUMERIK 828D

Information "SINUMERIK 828D" on page 110

SIEMENS SAFETY INTEGRATED
Set up work with open doors

The CNC-machine complies with standard DIN EN 55011: class C1 (Use only in industrial areas)

Fig. with double arm grab and optional chip trolley

Model	F 150
Carousel type changer with 16 slots	3511210
Double arm grab changer with 24 slots	3511211
Machine data	
Electrical connection	400 V / 3 Ph ~50 Hz
Total connected load	31 KVA
Milling spindle	
Drive motor	12 kW S1 operation; 9 kW
Drive motor torque	57 Nm
Spindle taper	SK 40 DIN 69871
Cooling lubricant system	
Motor - coolant pumps, 3 pcs.	1.27 kW each
Flow rate	66 - 100 l/min
Tank capacity	210 litres
End mill size	
Max. sensor head size	Ø 63 mm
Max. shaft milling cutter size	Ø 32 mm
Milling precision	
Repetition accuracy	± 0.005 mm
Positioning accuracy	± 0.005 mm
Standard carousel tool changer	
Number of tool slots	16 tools
Max. tool diameter	89 mm
Max. tool weight	8 kg
Tool change time tool to tool	9 seconds
Optional **Double arm grab tool changer**	
Number of tool slots	24 tools
Max. tool diameter	80 mm
Max. tool weight	8 kg
Tool change time tool to tool	2 seconds
Strokes	
X axis	760 mm
Y axis	430 mm
Z-axis	460 mm
Axis feed drive	
Milling feed X, Y, Z axis	10,000 mm/min.
Rapid motion X, Y, Z axis	24,000 mm/min.
Motor torque	
X axis / Y axis / Z axis	6 Nm / 6 Nm / 11 Nm
Speed range	
Speeds*	10 - 10,000 rpm
Pneumatic system	
Air pressure	5 - 7 bar
Milling table	
Clearance spindle to table	102 - 562 mm
Throat	480 mm
Table length x width	900 x 410 mm
T-slot size/amount/distance	16 mm / 4 / 102 mm
Max. load	350 kg
Dimensions	
Length x width x height	3,000 x 1,950 x 2,310 mm
Overall weight	3,520 kg

Dimensions

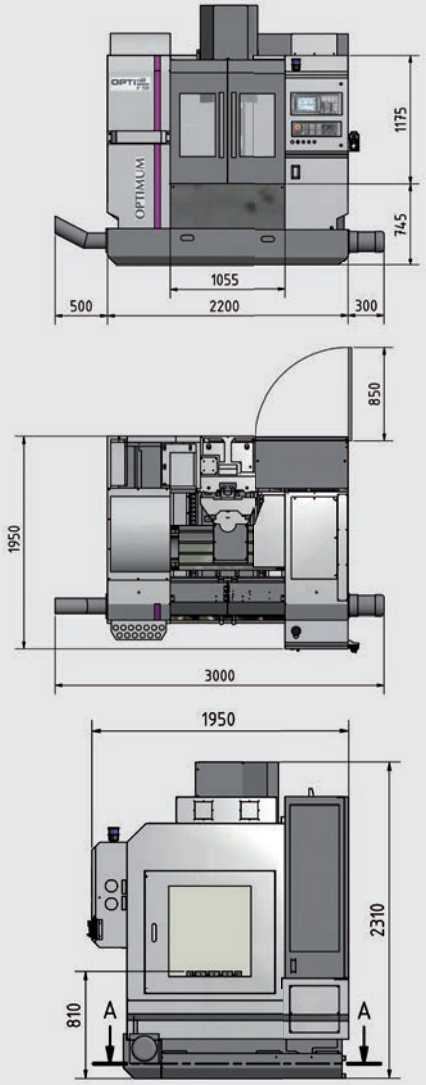

More information for F 150 in our video presentation on Optimum Maschinen YouTube channel

Starter set	SK 40 / DIN 69871
Article no.	3536109

Information "Starter set SK40/DIN 69871" on page 121

"CNC introductory training" on page 100

Standard equipment	
· Coolant gun	· Chip conveyor, screw auger type
· Chip flushing system	· Heat exchanger
· Work lamp	· EMC
· Six machine feet	

* Please note that the maximum spindle speed has to be reduced by approximately 20% in continuous operation

OPTImill® F 150

STANDARD EQUIPMENT

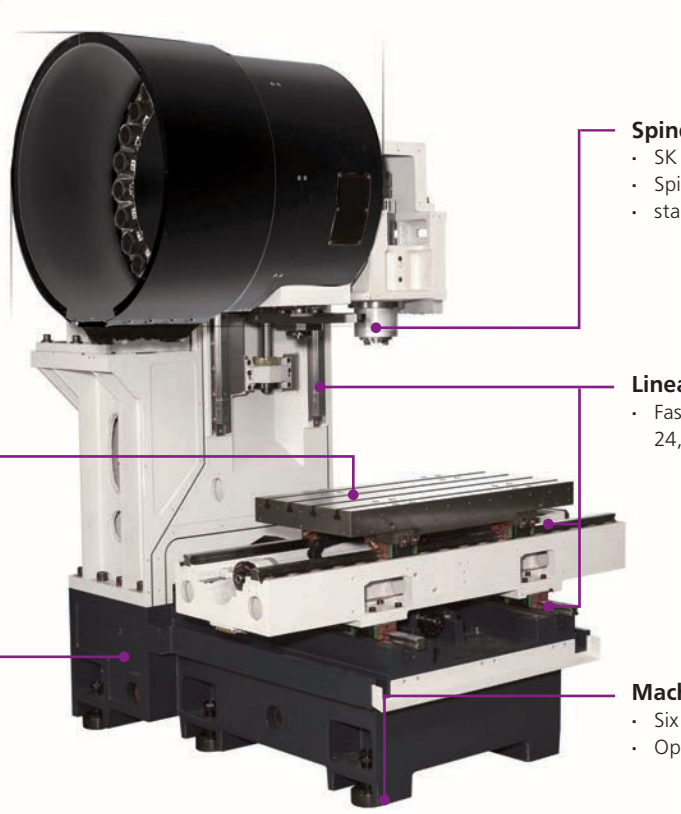

Spindle
- SK 40 DIN 69871
- Spindle speed
- standard 10,000 rpm

Linear guide
- Fast rapid motion speeds 24,000 rpm on all three axes

Milling table
- Solid, precise and generously dimensioned
- Workpiece mounting surface 900 x 410 mm
- Precise surface finish

Base body
- Quality cast with ribbed design

Machine feet
- Six pcs.
- Optimal machine levelling

Heat exchanger
- Closed cabinet with smart cooling management
- Optimal temperature even in case of high ambient temperatures
- Prevents dirt particles entering

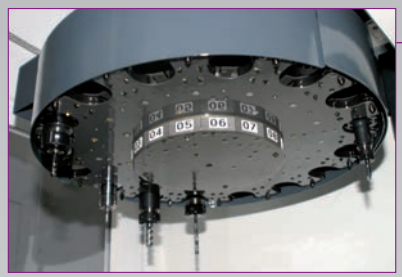

Tool changer system
- Carousel tool changer with 16 tool slots

or
- Tool changer, double arm grab with 24 tool slots
- Max. tool length 300 mm

Handwheel
- Portable
- Electronic
- Substantially facilitates running in of programs
- Emergency stop button
- Confirm button

Cleaning gun
- Easy cleaning of the workspace

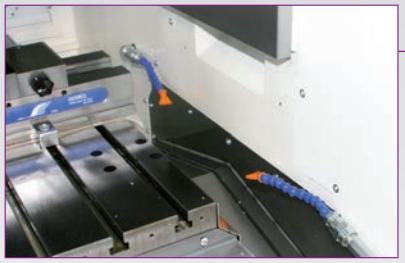

Chip flushing system
- Powerful chip flushing system for cleaning the workspace and workpiece

Laser measuring
- Guaranteed repetition and positioning accuracy

SPECIAL EQUIPMENT

8 License

7 Power transformer

6 Chip conveyor and trolley

1 Coolant true spindle

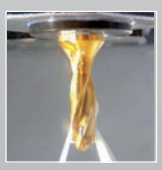

2 Fourth and fifth axis

3 Tool probe

4 Tool control system

5 Air conditioner

1	351121008	**Coolant true spindle CTS** 20 bar	· Integrated unit (we recommend an extraction)
	351121009	**Coolant true spindle CTS** 20 bar	· External unit; tank capacity 165 litres (we recommend an extraction)
	351121003	**Coolant true spindle CTS** 70 bar	· External unit; tank capacity 165 litres (we recommend an extraction)
2	351121024	**Fourth axis complete kit**	· Including three-jaw lathe chuck Ø 120 mm, tailstock, SIEMENS motor, assembly, Safety software for collision avoidance
	351121019	**Machine preparation**	· Fourth axis
	351121002	**Fourth and fifth axis complete kit**	· Including three-jaw lathe chuck Ø 100 mm, tailstock, SIEMENS motor · Assembly
	351121020	**Machine preparation**	· Fourth and fifth axis
	"Technical data fourth axis and fifth axis" on page 54		
3	Only ex warehouse Germany 9001041	**Touch probe for tool measurement, Renishaw OTS**	· Optical transmission module OMI-2T · OTS tool setter for tool measurement · Measuring cycle license · Assembly
	9001040	**Touch probe with optical signal transmission, Renishaw OMP40**	· OMP40-2 probe with optical recording, OMP 40/400 · Straight probe insert PS3-1C · Optical transmission module OMI-2T · Measuring cycle license · Assembly
	9001042	**Renishaw OTS probe and Renishaw OMP40-2 probe**	· OMP40-2 probe with optical recording, OMP 40/400 · Optical transmission module OMI-2T OTS tool setter for tool measurement · Measuring cycle license · Assembly
4	351121015	**Zero contact laser tool control system, Renishaw NC4**	· Compact, two-axis, touchless tool control system · Only one M command required
	351121018	**Machine preparation** Renishaw NC4	
5	351121005	**Air conditioner**	· Instead of standard equipment > heat exchanger
6	351121010	**Chip conveyor, belt-type**	· Instead of standard equipment > chip conveyor, screw auger type
	351121011	**Chip carriage**	· L x W x H: 994 x 510 x 838 mm, capacity: 65 litres
7	351121013	**Power transformer**	· for special voltages. Weight 147 kg
8	9001050	**Measuring cycle license**	· SIEMENS Control 828D/840D sl
NEW	9001051	**Software DXF-Viewer/Reader**	· from Version 4.7
	9001056	**Top surface for Siemens control**	· from Version 4.7

Special equipment can only be ordered ex works. Contact your dealer for pricing and further options, or mail us on: info@optimum-maschinen.de

OPTImill® F 151 HSC

PREMiUM line

The OPTIMUM PREMiUM High Speed machining center combines maximum productivity with low outlay

- Heavy duty version
- High productivity
- High reliability
- FEM analysed machine frame to guarantee optimal machine stability
- Linear guide for fast rapid motion speeds on all axes
- Precision ground, prestressed, high-performance ball screws (Ø 36 mm x P16 x C3) on all axes
- Tool changer, double arm grab with 32 tool slots
- Optionally with spindle speed up to 12,000 rpm or 15,000 rpm
- Torsion free machine base thanks to strong ribbing
- Quality meehanite cast body
- Cleaning gun
- Chip conveyor, belt-type
- RJ45 plug-in connection, USB connection and power connection 230 V
- Coolant unit with 210 litre coolant tank and chip flushing system
- Chip carriage
- Spindle oil cooler
- Closed cabinet with integrated heat exchanger; optimal temperature even in case of high ambient temperatures; prevents dirt particle penetration
- Telescopic guide rail covers on all three axes
- Two-year SIEMENS warranty included
- "Warranty extension" on page 110

INCLUDING

Safety Integrated
Residual material detection and processing
ShopMill work step programming
Managing network drives
3-D simulation
Simultaneous recording

SIEMENS control
SINUMERIK 828D

Information "SINUMERIK 828D" on page 110

Fig. F 151 HSC with optional fourth axis

Including spindle oil cooler

The CNC-machine complies with standard DIN EN 55011: class C1 (Use only in industrial areas)

Model	F 151HSC 12
Article no.	3511310
Model	**F 151HSC 15**
Article no.	3511312
Machine data	
Electrical connection	400 V / 3 Ph ~50 Hz
Total connected load	25 KVA
Milling spindle	
Drive motor	15 kW S1 operation 11 kW
Drive motor torque	80 Nm
Spindle taper	SK 40 DIN 69871
Milling precision	
Repetition accuracy	± 0.005 mm
Positioning accuracy	± 0.005 mm
Tool changer	
Number of tool slots	32 tools
Max. tool diameter	80 mm
Max. tool length	300 mm
Max. tool weight	8 kg
Tool change time Tool to tool	2 seconds
Strokes	
X axis	800 mm
Y axis	500 mm
Z-axis	500 mm
Axis feed drive	
Milling feed X, Y, Z axis	12,000 mm/min.
Rapid motion X, Y, Z axis	32,000 mm/min.
Speed range	
Speed **F 151HSC 12**	**12,000 rpm**
Speed **F 151HSC 15**	**15,000 rpm**
Pneumatic system	
Air pressure	6 bar
Air consumption	400 l/min.
Milling table	
Clearance spindle to table	100 – 600 mm
Throat	595 mm
Table length x width	900 x 520 mm
T-slot size/amount/distance	16 mm / 5 / 63 mm
Max. load	450 kg
Dimensions	
Length x width x height	2,500 x 2,644 x 2,922 mm
Overall weight	5,000 kg

Dimensions

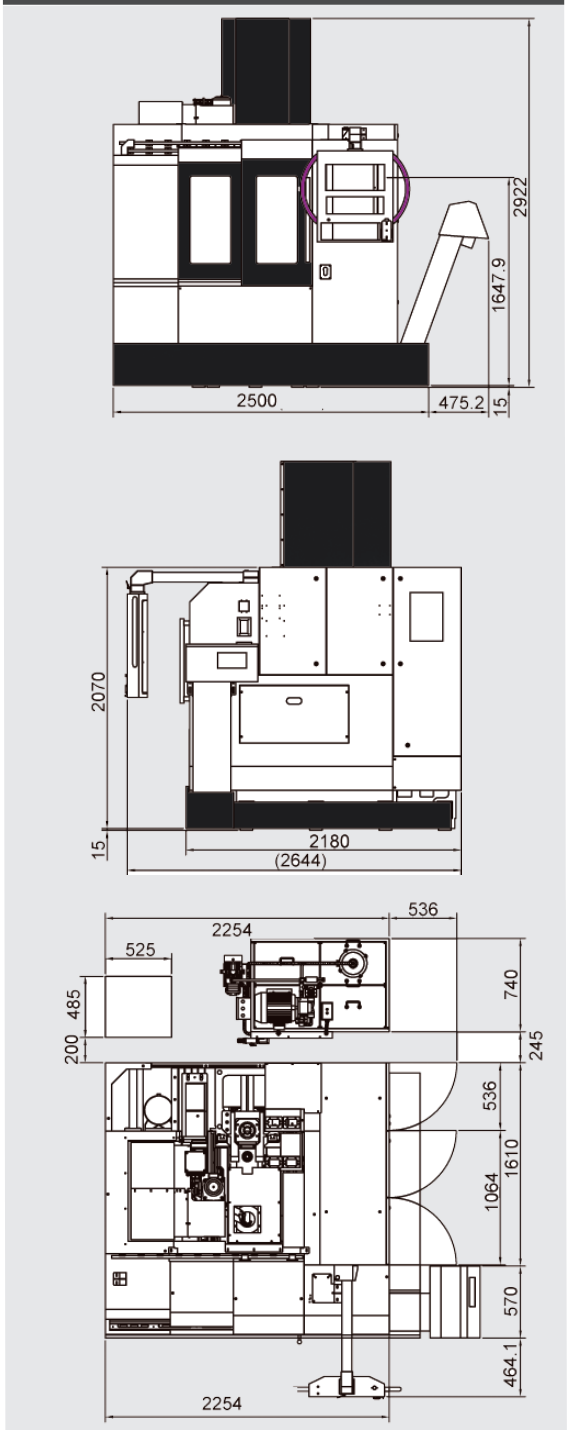

Standard equipment
· Coolant gun
· Chip flushing system
· Halogen lamp
· Six machine feet
· Spindle oil cooler
· Chip conveyor, belt-type
· Chip carriage
· RS232 / ETHERNET
· Heat exchanger
· 20 bar high pressure internal pump
· Automatic lubrication system

Starter kit SK 40	3536109
Comprises:	
1 pc. milling head holder	
1 pc. chuck	
2 pcs. each Weldon 6 / 20 mm	
1 pc. each Weldon 8 / 10 / 12 / 16 mm	
1 pc. adapter SK 40 to MT 3	
3 pcs. collet chuck ER 32	
1 pc. spanner ER 32	
18 pcs. collet ER 32	
1 pc. height adjuster	
Assembly and tool adjustment gauge	
15 pcs. pull studs	
1 pc. taper wiper	
"Starter set SK40/DIN 69871" on page 121	

"CNC introductory training" on page 100

* Please note that the maximum spindle speed has to be reduced by approximately 20% in continuous operation

OPTImill® F 151 HSC

STANDARD EQUIPMENT

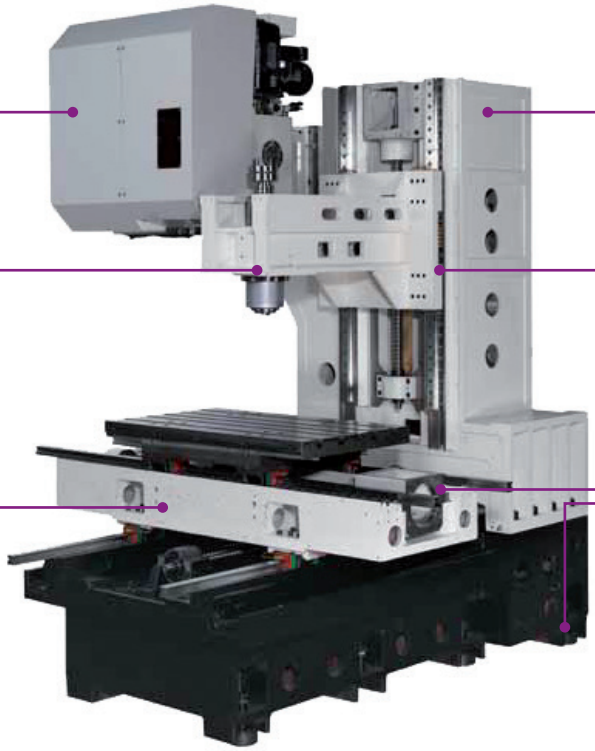

Cast body
- Quality cast meehanite

Spindle
- SK 40 DIN 69871
- Spindle speed
- optionally 12,000 rpm
- or 15,000 rpm

Base body
- Quality cast with ribbed design

Servomotors
- Mounted directly on the ball screw
- Improves positioning accuracy

Linear guide
- Fast rapid motion speeds 32,000 rpm on all three axes

Machine feet
- 6 pcs.
- Optimal machine levelling

Heat exchanger
- Closed cabinet with smart cooling management
- Optimal temperature even in case of high ambient temperatures
- Prevents dirt particles entering

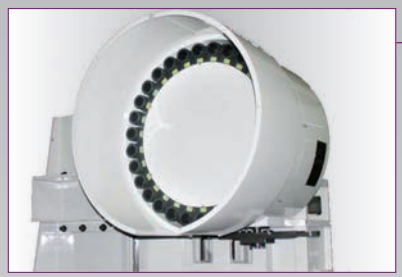

Tool changer system
- Tool changer, double arm grab with 32 tool slots
- Max. tool length 300 mm

Handwheel
- Electronic
- Portable
- Substantially facilitates running in of programs
- Emergency stop button
- Confirm button

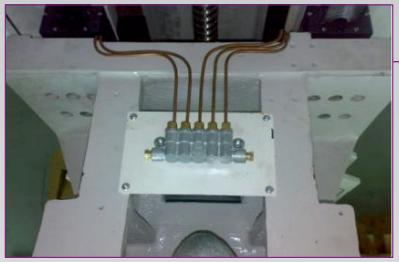

Automatic lubrication system
- Float switch measures the oil quantity. If the oil level is too low, an acoustic signal is output, thus preventing machine damage

Milling table
- Solid, precise and generously dimensioned
- Workpiece mounting surface 900 x 520 mm
- Precision ground
- Five T-slots

Laser measuring
- Guaranteed repetition and positioning accuracy

Special equipment can only be ordered ex works. Contact your dealer for pricing and further options, or mail us on: info@optimum-maschinen.de

SPECIAL EQUIPMENT

8 License

7 Power transformer

6 Oil skimmer

1 Coolant true spindle

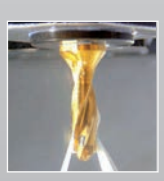

2 Fourth and fifth axis

3 Tool probe

4 Tool control system

5 Air conditioner

1	351131001	**Coolant true spindle CTS** 20 bar	· External unit; tank capacity 165 litres (we recommend an extraction)
	351131002	**Coolant true spindle CTS** 70 bar	· External unit; tank capacity 165 litres (we recommend an extraction)
2	351131007	**Fourth axis complete kit**	· Including three-jaw lathe chuck Ø 150 mm, tailstock, SIEMENS motor, assembly · Safety software for collision avoidance
	351131005	**Machine preparation** - fourth axis	
	351131008	**Fourth and fifth axis complete kit**	· Including three-jaw lathe chuck Ø 175 mm, tailstock, SIEMENS motor, assembly
	351131006	**Machine preparation** - fourth and fifth axis	
	"Technical data fourth axis and fifth axis" on page 54		
3 (Only ex warehouse Germany)	9001041	**Touch probe for tool measurement, Renishaw OTS**	· Optical transmission module OMI-2T · OTS tool setter for tool measurement · Measuring cycle license · Assembly
	9001040	**Touch probe with optical signal transmission, Renishaw OMP40**	· OMP40-2 probe with optical recording, OMP 40/400 with SK40 · Straight probe insert PS3-1C · Optical transmission module OMI-2T · Measuring cycle license · Installation
	9001042	**Renishaw OTS probe and Renishaw OMP40-2 probe**	· OMP40-2 probe with optical recording, OMP 40/400 with SK40 · Optical transmission module OMI-2T OTS tool setter for tool measurement · Measuring cycle license · Installation
4	351131015	**Zero contact laser tool control system, Renishaw NC4**	· Compact, two-axis, touchless tool control system · Only one M command required
	351131018	**Machine preparation** Renishaw NC4	
NEW		**Rapid motion** X, Y, Z axis **48,000 mm/min.**	· Instead of standard equipment > spindle 32,000 mm/min.
5	351131009	**Air conditioner**	· Instead of standard equipment > heat exchanger
6	351131003	**Oil skimmer**	· Separation of non-emulsified a stranger by skimming off · Separation of the solids by settling in the sump
7	351131004	**Power transformer**	· for special voltages. Weight 147 kg
NEW 8	9001050	**Measuring cycle license**	· SIEMENS Control 828D/840D sl
	9001051	**Software DXF-Viewer/Reader**	· from Version 4.7
	9001056	**Top surface for Siemens control**	· from Version 4.7

OPTImill® F 211 HSC

PREMiUM line

The OPTIMUM PREMiUM High Speed machining center offers the best preconditions for highly productive machining and precise machining results

- Heavy duty version
- High productivity
- FEM analysed machine frame to guarantee optimal machine stability
- Linear guide for fast rapid motion speeds on all axes
- Tool changer, double arm grab with 32 tool slots
- Optionally with spindle speed up to 12,000 rpm or 15,000 rpm
- High reliability
- Torsion free machine base thanks to strong ribbing
- Quality meehanite cast body
- Precision ground, prestressed, high-performance ball screws (Ø 36 mm x P16 x C3) on all axes
- Cleaning gun
- Chip conveyor, belt-type
- RJ45 plug-in connection, USB connection and power connection 230 V
- Integrated coolant unit with 210 litre coolant tank and chip flushing system
- Chip carriage
- Closed cabinet with integrated heat exchanger; optimal temperature even in case of high ambient temperatures; prevents dirt particle penetration
- Spindle oil cooler
- Telescopic guide rail covers on all three axes
- Two-year SIEMENS warranty included
- "Warranty extension" on page 110

INCLUDING

Safety Integrated
Residual material detection and processing
ShopMill work step programming
Managing network drives
3-D simulation
Simultaneous recording

SIEMENS control

SINUMERIK 828D

Information "SINUMERIK 828D" on page 110

Siemens SAFETY INTEGRATED
Set up work with open doors

PREMIUM

Fig. F 211 HSC with optional fourth axis (option)

Including spindle oil cooler

The CNC-machine complies with standard DIN EN 55011: class C1 (Use only in industrial areas)

Model	F 211HSC 12
Article no.	3511320
Model	**F 211HSC 15**
Article no.	3511322
Machine data	
Electrical connection	400 V / 3 Ph ~50 Hz
Total connected load	44 KVA
Milling spindle	
Drive motor	11 kW / 15 kW
Drive motor torque	53 Nm
Spindle taper	SK 40 DIN 69871
Milling precision	
Repetition accuracy	± 0.005 mm
Positioning accuracy	± 0.005 mm
Tool changer	
Number of tool slots	32 tools
Max. tool diameter	80 mm
Max. tool length	300 mm
Max. tool weight	8 kg
Tool change time Tool to tool	2 seconds
Strokes	
X axis	1,000 mm
Y axis	560 mm
Z-axis	550 mm
Axis feed drive	
Milling feed X, Y, Z axis	12,000 mm/min.
Rapid motion X, Y, Z axis	32,000 mm/min.
Speed range	
Speed **F 211HSC 12**	**12,000 rpm**
Speed **F 211HSC 15**	**15,000 rpm**
Pneumatic system	
Air pressure	6 bar
Air consumption	400 l/min.
Milling table	
Clearance spindle to table	100 – 650 mm
Throat	595 mm
Table length x width	1,200 x 520 mm
T-slot size/amount/distance	16 mm / 5 / 63 mm
Max. load	800 kg
Dimensions	
Length x width x height	3,230 x 2,644 x 2,972 mm
Overall weight	5,200 kg

Dimensions

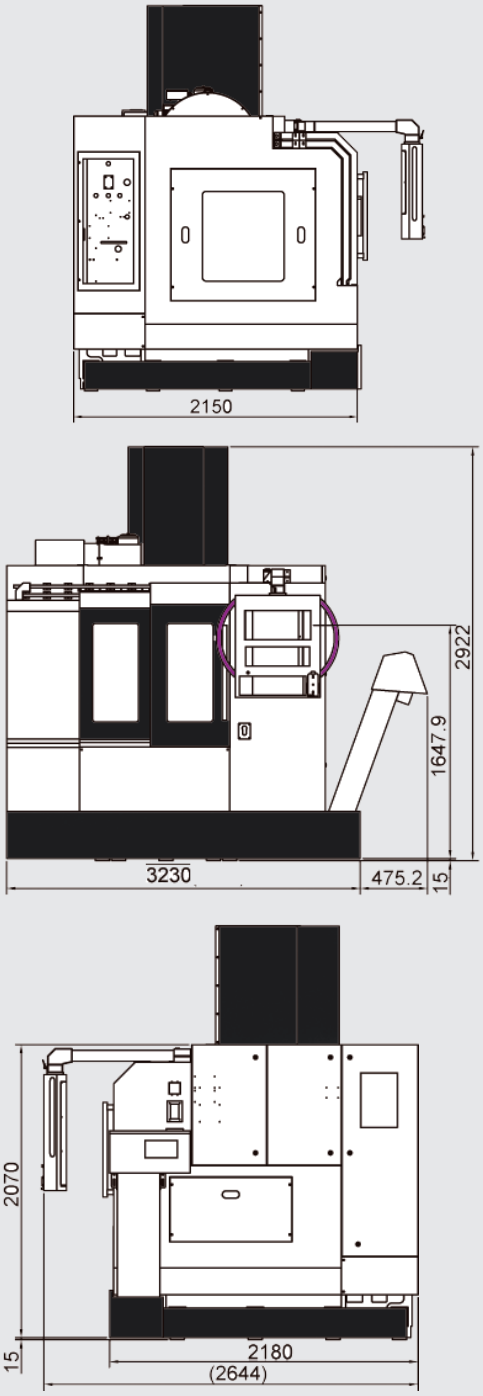

Starter set	SK 40 / DIN 69871
Article no.	3536109

"Starter set SK40/DIN 69871" on page 121

Standard equipment
· SINUMERIK Operate
· Coolant gun
· Chip flushing system
· Halogen lamp
· Six machine feet
· Spindle oil cooler
· Chip conveyor, belt-type

· Chip carriage
· RS232 / ETHERNET
· Heat exchanger
· Coolant true spindle 20 bar internal (we recommend an extraction)
· Automatic lubrication system

* Please note that the maximum spindle speed has to be reduced by approximately 20% in continuous operation

- We urgently recommend initial training by our qualified staff.

"CNC introductory training" on page 100

OPTImill® F 211 HSC

STANDARD EQUIPMENT

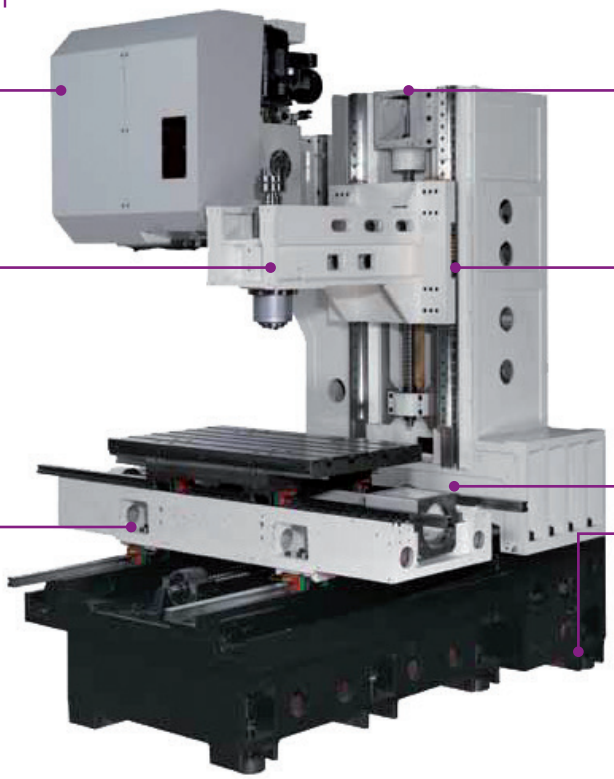

Cast body
- Quality cast meehanite

Spindle
- SK 40 DIN 69871
- Spindle speed
- optionally 12,000 rpm

or
- 15,000 rpm

Base body
- Quality cast with ribbed design

Servomotors
- Mounted directly on the ball screw
- Improves positioning accuracy

Linear guide
- Fast rapid motion speeds 32,000 rpm on all three axes

Machine feet
- Six pcs.
- Optimal machine levelling

Heat exchanger
- Closed cabinet with smart cooling management
- Optimal temperature even in case of high ambient temperatures
- Prevents dirt particles entering

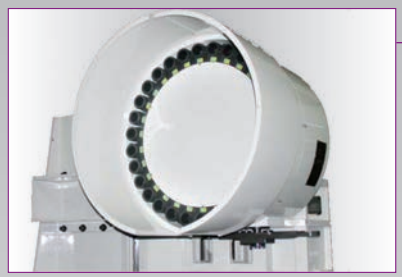

Tool changer system
- Tool changer, double arm grab with 32 tool slots
- Max. tool length 300 mm

Handwheel
- Electronic
- Portable
- Substantially facilitates running in of programs
- Emergency stop button
- Confirm button

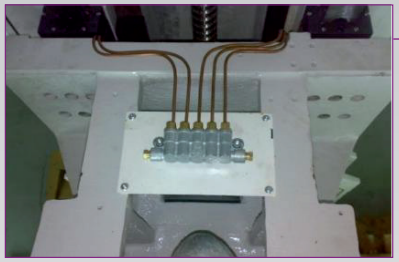

Automatic lubrication system
- Float switch measures the oil quantity. If the oil level is too low, an acoustic signal is output, thus preventing machine damage

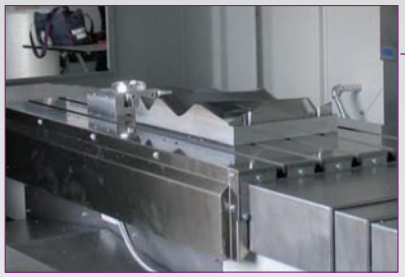

Milling table
- Solid, precise and generously dimensioned
- Workpiece mounting surface 900 x 520 mm
- Precision ground
- Five T-slots

Laser measuring
- Guaranteed repetition and positioning accuracy

Special equipment can only be ordered ex works. Contact your dealer for pricing and further options, or mail us on: info@optimum-maschinen.de

SPECIAL EQUIPMENT

8 License

7 Power transformer

6 Oil skimmer

1 Coolant true spindle

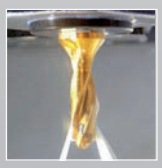

2 Fourth and fifth axis

3 Tool probe

4 Tool control system

5 Air conditioner

1	351132001	**Coolant true spindle CTS** 20 bar	· External unit; tank capacity 165 litres (we recommend an extraction)
	351132002	**Coolant true spindle CTS** 70 bar	· External unit; tank capacity 165 litres (we recommend an extraction)
2	351132007	**Fourth axis complete kit**	· Including three-jaw lathe chuck Ø 150 mm, tailstock, SIEMENS motor, assembly · Safety software for collision avoidance
	351132005	**Machine preparation** - fourth axis	
	351132008	**Fourth and fifth axis complete kit**	· Incl. 3-jaw lathe chuck Ø 175 mm, tailstock, SIEMENS motor, assembly
	351132006	**Machine preparation** - fourth/fifth axis	
	"Technical data fourth axis and fifth axis" on page 54		
3	Only ex warehouse Germany 9001041	**Touch probe for tool measurement, Renishaw OTS**	· Optical transmission module OMI-2T · OTS tool setter for tool measurement · Measuring cycle license · Assembly
	9001040	**Touch probe with optical signal transmission, Renishaw OMP40**	· OMP40-2 probe with optical recording, OMP 40/400 with SK40 · Straight probe insert PS3-1C · Optical transmission module OMI-2T · Measuring cycle license · Assembly
	9001042	**Renishaw OTS probe and Renishaw OMP40-2 probe**	· OMP40-2 probe with optical recording, OMP 40/400 with SK40 · Optical transmission module OMI-2T OTS tool setter for tool measurement · Measuring cycle license · Assembly
4	351132015	**Zero contact laser tool control system, Renishaw NC4**	· Compact, two-axis, touchless tool control system · Only one M command required
	351132018	**Machine preparation** Renishaw NC4	
NEW		**Rapid motion** X, Y, Z axis **48,000 mm/min.**	· Instead of standard equipment > spindle 32,000 mm/min.
5	351132009	**Air conditioner**	· Instead of standard equipment > heat exchanger
6	351132003	**Oil skimmer**	· Separation of non-emulsified a stranger by skimming off · Separation of the solids by settling in the sump
7	351132004	**Power transformer**	· for custom voltage · Weight 147 kg
NEW 8	9001050	**Measuring cycle license**	· SIEMENS Control 828D/840D sl
	9001051	**Software DXF-Viewer/Reader**	· from Version 4.7
	9001056	**Top surface for Siemens control**	· from Version 4.7

OPTImill® F 310

PREMiUM line

The OPTIMUM PREMiUM CNC milling machine is characterised by performance, speed, precision and a long service life

- Precision linear guide on all axes
- Tool changer, double arm grab with 24 tool slots
- Precision ground, prestressed, high-performance ball screws (Ø 40 mm x P12 x C3) on all axes
- Main spindle SK40 up to 10,000 rpm, with belt drive to minimise vibrations, as well as heat and noise development
- Torsion free machine base thanks to strong ribbing
- Router table and machine base made of premium cast meehanite, low vibration
- High-torque servodrives mounted directly on the ball screws on all three axes
- Chip conveyor, belt-type
- Coolant system with 4 bar output, 210 litre coolant tank and chip flushing system
- Cleaning gun
- RJ45 plug-in connection, USB connection and power connection 230 V
- Telescopic guide rail covers on all three axes
- Closed cabinet with integrated heat exchanger; optimal temperature even in case of high ambient temperatures; prevents dirt particle penetration
- Spindle oil cooling
- Oil skimmer
- Two-year SIEMENS warranty included
- "Warranty extension" on page 110

INCLUDING

Safety Integrated
Residual material detection and processing
ShopMill work step programming
Managing network drives
3-D simulation
Simultaneous recording

SIEMENS control
SINUMERIK 828D

Information "SINUMERIK 828D" on page 110

Siemens SAFETY INTEGRATED
Set up work with open doors

PREMIUM

Fig. F 310

The CNC-machine complies with standard DIN EN 55011: class C1 (Use only in industrial areas)

Model	F 310
Article no.	3511230
Machine data	
Electrical connection	400 V / 3 Ph ~50 Hz
Total connected load	31 KVA
Milling spindle	
Drive motor	13 kW S1
Drive motor torque	70 Nm
Spindle taper	SK 40 DIN 69871
Throat	615 mm
Cooling lubricant system	
Motor - coolant pumps, four pcs.	1.27 kW each
Flow rate	66 - 100 l/min
Tank capacity	210 litres
End mill size	
Max. sensor head size	Ø 63 mm
Max. shaft milling cutter size	Ø 32 mm
Milling precision	
Repetition accuracy	± 0.005 mm
Positioning accuracy	± 0.005 mm
Tool changer	
Number of tool slots	24 tools
Max. tool diameter adjacent slots free	125 mm
Max. tool diameter	80 mm
Max. tool length	300 mm
Max. tool weight	8 kg
Tool change time tool to tool	2 seconds
Strokes	
X axis	1,000 mm
Y axis	560 mm
Z-axis	550 mm
Axis feed drive	
Milling feed X, Y, Z axis	10,000 mm/min.
Motor torque	
X axis	16 Nm
Y axis	16 Nm
Z-axis	11 Nm
Rapid mode	
X/Y axis	30,000 mm/min
Z-axis	24,000 mm/min
Speed range	
Speeds*	10 - 10,000 rpm
Pneumatic system	
Air pressure	6 bar
Milling table	
Clearance spindle to table	100 - 650 mm
Table length x width	1,200 x 520 mm
T-slot size/amount/distance	16 mm / 5 / 80 mm
Max. load	800 kg
Dimensions	
Length x width x height	3,265 x 2,600 x 2,735 mm
Overall weight	5,800 kg

Standard equipment
· Coolant gun
· Chip flushing system
· Halogen lamp
· 6 machine feet
· Spindle oil cooler
· Chip conveyor, belt-type
· Chip carriage

· EMC
· Heat exchanger
· Coolant pump 4 bar
· Oil skimmer

Starter set	SK 40 / DIN 69871
Article no.	3536109

"Starter set SK40/DIN 69871" on page 121

* Please note that the maximum spindle speed has to be reduced by approximately 20% in continuous operation

Dimensions

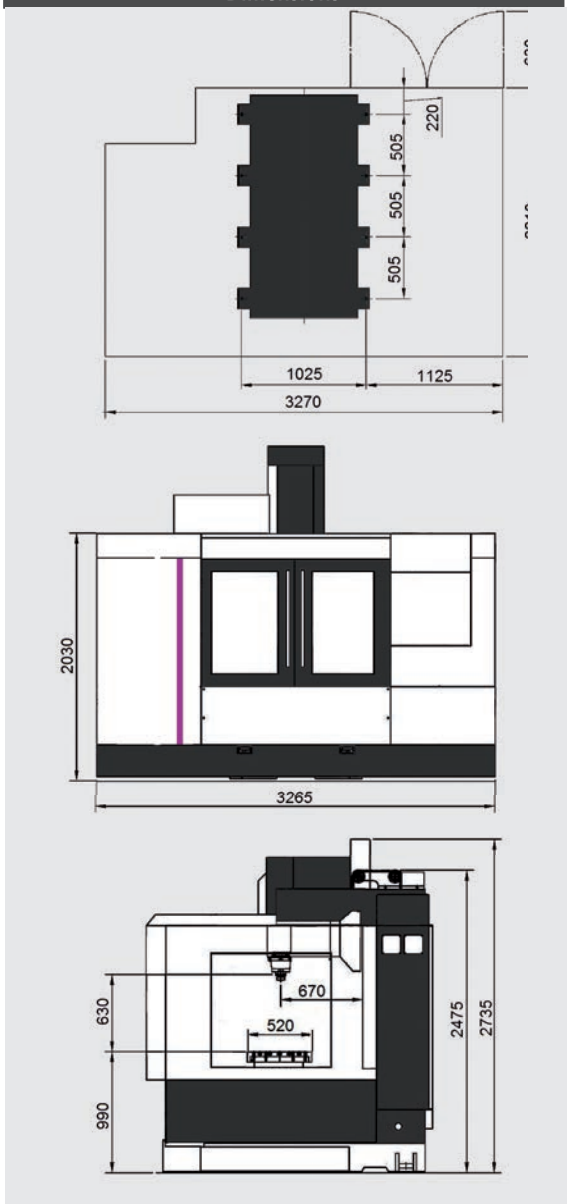

Mehr Informationen für Sie über die F 310 in unserer Videopräsentation auf dem Optimum Maschinen YouTube Kanal

- Wir empfehlen dringend eine Einweisung durch unser Fachpersonal.

"CNC introductory training" on page 100

OPTImill® F 310

STANDARD EQUIPMENT

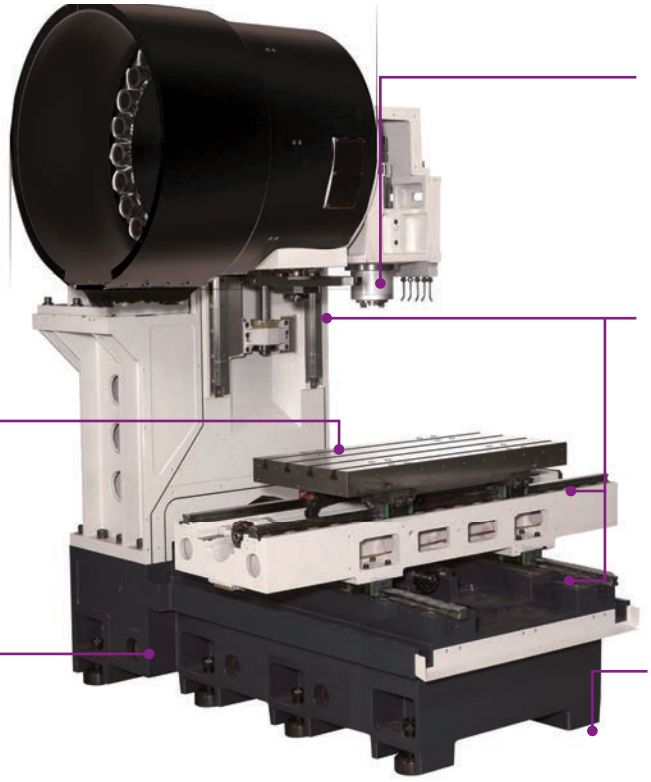

Spindle
- SK 40 DIN 69871
- Spindle speed
- 10,000 rpm standard

Linear guide
- Fast rapid motion speeds 30,000 rpm on X and Y axis and 24,000 mm/min on Z axis

Milling table
- Solid, precise and generously dimensioned
- Workpiece mounting surface 1,200 x 520 mm
- Precise surface finish
- Quality cast meehanite
- Five T-slots

Base body
- Quality cast with ribbed design

Machine feet
- Optimal machine levelling

Heat exchanger
- Closed cabinet with smart cooling management
- Optimal temperature even in case of high ambient temperatures
- Prevents dirt particles entering

Tool changer system
- Double arm grab tool changer with 24 tool slots
- Max. tool length 300 mm

Oil skimmer
- Separation of non-emulsified a stranger by skimming off
- Separation of the solids by settling in the sump

Handwheel
- Electronic
- Substantially facilitates running in of programs
- Emergency stop button
- Confirm button

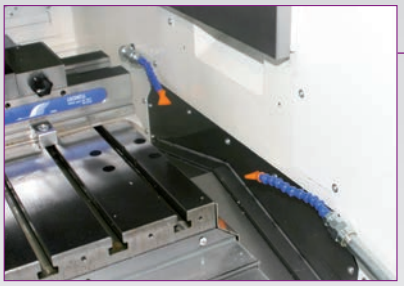

Chip flushing system
- Powerful chip flushing system for cleaning the workspace and workpiece

Laser measuring
- Guaranteed repetition and positioning accuracy

Special equipment can only be ordered ex works. Contact your dealer for pricing and further options, or mail us on: info@optimum-maschinen.de

SPECIAL EQUIPMENT

7 Swarf conveyor

8 Power transformer

6 Air conditioner

1 Tool changer

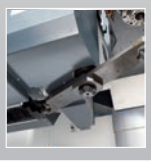

2 Coolant true spindle

3 Fourth and fifth axis

4 Tool probe

5 Tool control system

1	351123010	**Double arm grab tool changer with 30 tool slots**	· Instead of standard equipment > double arm grab tool changer with 24 tool slots
2	351123008	**Coolant true spindle CTS** 20 bar	· Integrated unit (we recommend an extraction)
	351123009	**Coolant true spindle CTS** 20 bar	· External unit; tank capacity 165 litres (we recommend an extraction)
	351123003	**Coolant true spindle CTS** 70 bar	· External unit; tank capacity 165 litres (we recommend an extraction)
3	351123024	**Fourth axis complete kit**	· Incl. three-jaw lathe chuck Ø 120 mm, tailstock, SIEMENS motor, assembly · Safety software for collision avoidance
	351123019	**Machine preparation** - fourth axis	
	351123016	**Fourth and fifth axis complete kit**	· Including three-jaw lathe chuck Ø 200 mm, tailstock, SIEMENS motor, assembly
	351123020	**Machine preparation** - fourth/fifth axis	
i	"Technical data fourth axis and fifth axis" on page 54		
4	351123012	**Touch probe for tool measurement, Renishaw TS 27R**	· Standard probe, precise tool length and diameter measurement, checking of rotating tools without wear on the tool or probe
	351123014	**Touch probe with optical signal transmission, Renishaw OMP60**	· Infrared transmission through 360° at an angle of 90° to the spindle axis; reduces tooling times by up to 90%
	351123017	**Machine preparation** Renishaw OMP60	
4	Only ex warehouse Germany 9001041	**Touch probe for tool measurement, Renishaw OTS**	· Optical transmission module OMI-2T · OTS tool setter for tool measurement · Measuring cycle license · Assembly
	9001040	**Touch probe with optical signal transmission, Renishaw OMP40**	· OMP40-2 probe with optical recording, OMP 40/400 with SK40 · Straight probe insert PS3-1C · Optical transmission module OMI-2T · Measuring cycle license · Assembly
	9001042	**Renishaw OTS probe and Renishaw OMP40-2 probe**	· OMP40-2 probe with optical recording, OMP 40/400 with SK40 · Optical transmission module OMI-2T OTS tool setter for tool measurement · Measuring cycle license · Assembly
5	351123013	**Zero contact laser tool control system, Renishaw NC4**	· Compact, two-axis, touchless tool control system · Only one M command required
	351123018	**Machine preparation** Renishaw NC4	
6	351123005	**Air conditioner**	· Instead of standard equipment > heat exchanger
7	351123011	**Swarf conveyor Chip conveyor**	· Instead of standard equipment > chip conveyor, belt type
	351123015	**Power transformer**	· for custom voltage Weight 147 kg
	9001050	**Measuring cycle license**	· SIEMENS Control 828D/840D sl
NEW	9001051	**Software DXF-Viewer/Reader**	· from Version 4.7
	9001056	**Top surface for Siemens control**	· from Version 4.7

OPTImill® F 311 HSC

PREMiUM line

Efficient OPTIMUM PREMiUM High Speed machining center, optionally with four spindle speeds, provides the ideal solution for your task

- Heavy duty version
- High productivity
- Precision linear guide on all axes
- Fast rapid motion speed of 42 m/min on all axes
- Double arm grab tool changer with 30 tool slots
- Precision ground, prestressed, high-performance ball screws (Ø 40 mm x P16 x C3) on all axes
- High-speed spindles
  - 12,000 / 15,000 rpm direct drive
  - 18,000 / 24,000 rpm electrical insert spindle
- Fast work feed up to 10 m/min
- High-torque servodrives on all three axes, mounted directly on the ball screws
- Spindle borne on P5 precision bearings and permanently lubricated
- Coolant true spindle 20 bar (we recommend an extraction)
- Integrated coolant pump with chip flushing system and built-in coolant tank
- Chip conveyor, screw auger type
- Cleaning gun
- Automatic centralised lubrication and minimum level warning
- RJ45 plug-in connection, USB connection and power connection 230 V
- Telescopic guide rail covers on all three axes
- Closed cabinet with integrated heat exchanger; optimal temperature even in case of high ambient temperatures; prevents dirt particle penetration
- Spindle oil cooling
- Two years Repair service contract including
- more "Siemens service repair contracts (RSV)" on page 112

INCLUDING

Safety Integrated
Residual material detection and processing
ShopMill work step programming
Managing network drives
3-D simulation
Simultaneous recording

SIEMENS control
SINUMERIK 840D sl

Including spindle oil cooler

Fig. F 311 HSC

The CNC-machine complies with standard DIN EN 55011: class C1 (Use only in industrial areas)

Model	F 311HSC 12	F 311HSC 18
Article no.	3511330	3511334
Model	**F 311HSC 15**	**F 311HSC 24**
Article no.	3511332	3511336
Machine data		
Electrical connection		400 V / 3 Ph ~50 Hz
Total connected load		62,5 KVA
Milling spindle		
Drive motor		30 kW S1 operation 20 kW
Drive motor torque		250 Nm
Spindle taper F 311HSC 12 / F 311HSC 15		SK 40 DIN 69871
Spindle taper F 311HSC 18 / F 311HSC 24		HSK 63 DIN 69893
Throat		745 mm
Cooling lubricant system		
Motor coolant pumps, 3 pcs.		850 Watts
Flow rate		60 l/min
Tank capacity		426.5 litres
Milling precision		
Repetition accuracy		± 0.005 mm
Positioning accuracy		± 0.005 mm
Tool changer		
Number of tool slots		30 tools
Max. tool diameter		75 mm
Max. tool diameter (adjacent slots free)		125 mm
Max. tool length		300 mm
Max. tool weight		8 kg
Tool change time tool to tool		2 seconds
Strokes		
X axis		1,000 mm
Y axis		650 mm
Z-axis		650 mm
Axis feed drive		
Milling feed X, Y, Z axis		10,000 mm/min.
Rapid mode		
X, Y, Z axis		42,000 mm/min.
Motor torque		
X axis		11 Nm
Y axis		11 Nm
Z-axis		27 Nm
Speed range		
Speed **F 311HSC 12**		**12,000 rpm**
Speed **F 311HSC 15**		**15,000 rpm**
Speed **F 311HSC 18**		**18,000 rpm**
Speed **F 311HSC 24**		**24,000 rpm**
Pneumatic system		
Air pressure		6 bar
Air consumption		400 l**/min**.
Milling table		
Clearance spindle to table		100 – 750 mm
Throat		745 mm
Table length x width		1,400 x 610 mm
T-slot size/amount/distance		18 mm / 5 / 100 mm
Max. load		1,000 kg
Dimensions		
Length with/without chip conveyor		3,250 / 3,887 mm
width x height		4,103 x 3,285 mm
Overall weight		10,000 kg

Accessories	Article no.
Starter kit HSK A-63	3536110
Information "Starter set HSK A-63" on page 122	
Starter kit SK 40 / DIN 69871	3536109
Information "Starter set SK40/DIN 69871" on page 121	

* Please note that the maximum spindle speed has to be reduced by approximately 20% in continuous operation

Dimensions

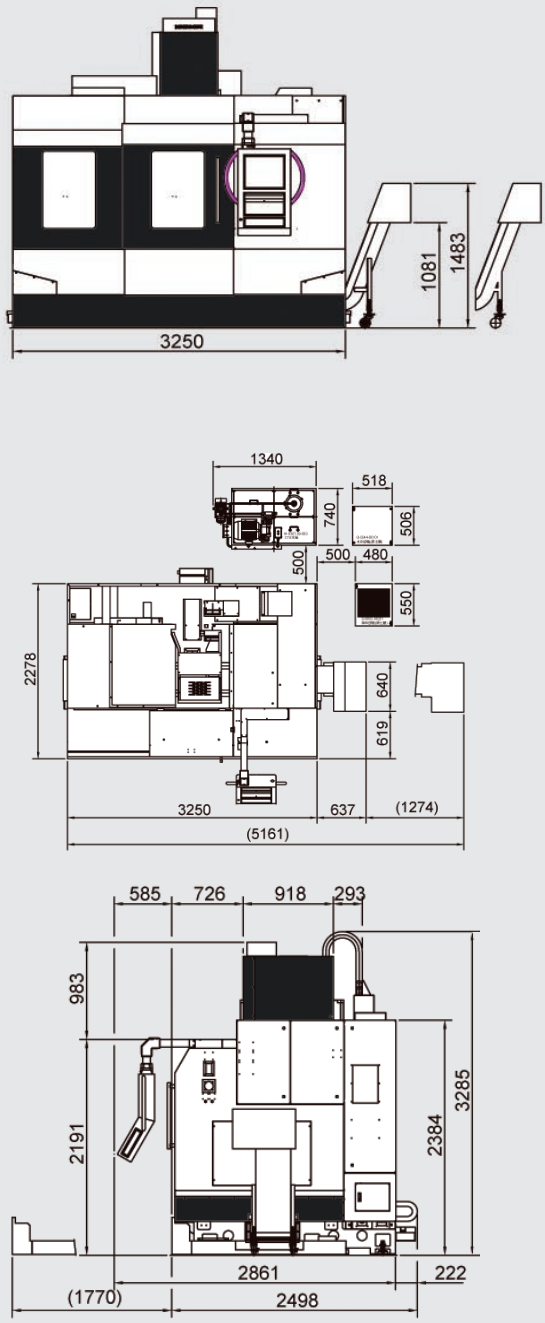

Standard equipment
· Tool changer, double arm grab with 30 tool slots
· Coolant gun
· Chip flushing system
· Halogen lamp
· Six machine feet
· Spindle oil cooler
· Chip conveyor, screw auger type
· Chip carriage
· EMC
· Heat exchanger
· Coolant true spindle CTS 20 bar internal (we recommend an extraction)
· Pneumatic counterweight
· Automatic lubrication system
· Technology package milling SINUMERIK MDynamics

OPTImill® F 311 HSC

STANDARD EQUIPMENT

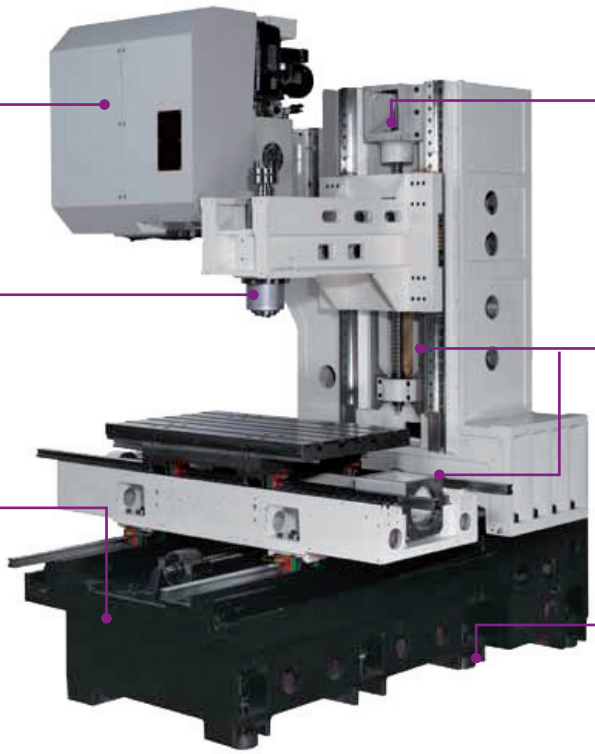

Cast body
- Premium cast meehanite, low vibration

Spindle
- SK 40 DIN 69871
- Four different spindle speeds - optionally between 12,000 rpm and 24,000 rpm

Base body
- Torsion free premium cast machine base thanks to strong ribbing

Servomotors
- Mounted directly on the ball screw
- Improves positioning accuracy
- Orbital spindles are precision centered
- Prestressed nuts, each borne by precision bearings
- Automatic oil lubrication of spindles
- Grease lubrication system for bearings

Precision liner roller guides
- Fast rapid motion speeds 42,000 rpm on all three axes

Machine feet
- Six pcs.
- Optimal machine levelling

Heat exchanger
- Closed cabinet with smart cooling management
- Optimal temperature even in case of high ambient temperatures
- Prevents dirt particles entering

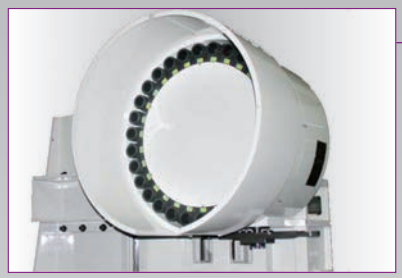

Tool changer system
- Tool changer, double arm grab with 30 tool slots
- Max. tool length 300 mm
- User-friendly tooling from the rear

Handwheel
- Electronic
- Substantially facilitates running in of programs
- Emergency stop button
- Confirm button

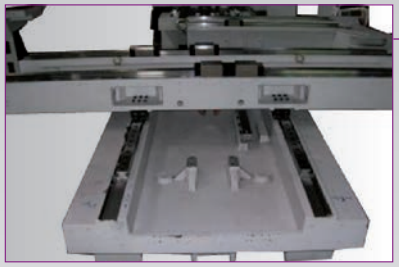

Y axis
- Extra wide guide rails, 700 mm
- Permanent load bearing capability

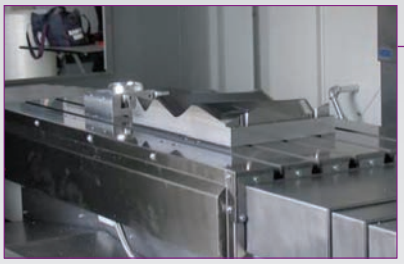

Milling table
- Solid, precise and generously dimensioned
- Workpiece mounting surface 1,400 x 610 mm
- Precise surface finish
- Five grooves

Laser measuring
- Guaranteed repetition and positioning accuracy

Special equipment can only be ordered ex works. Contact your dealer for pricing and further options, or mail us on: info@optimum-maschinen.de

SPECIAL EQUIPMENT

8 Power transformer

7 Oil skimmer

1 Coolant true spindle

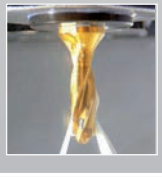

2 Fourth and fifth axis

3 Control panel

4 Tool probe

5 Tool control system

6 Air conditioner

1	351133001	**Coolant true spindle CTS** 20 bar	· External unit; tank capacity 165 litres (we recommend an extraction)
	351133002	**Coolant true spindle CTS** 70 bar	· External unit; tank capacity 165 litres (we recommend an extraction)
2	351133007	**Fourth axis complete kit**	· Including three-jaw lathe chuck Ø 200 mm, tailstock, SIEMENS motor, assembly · Safety software for collision avoidance
	351133005	**Machine preparation** - fourth axis	
	351133008	**Fourth and fifth axis complete kit**	· Including 3-jaw lathe chuck Ø 200 mm, tailstock, SIEMENS motor, assembly
	351133006	**Machine preparation**	· Fourth and fifth axis
	"Technical data fourth axis and fifth axis" on page 54		
NEW 3	351133020	**Sinumerik control panel OP 019 black**	19-inch display, touch control Instead of standard equipment > 19-inch LCD display
	351133019	**Sinumerik control panel OP 015 black**	19-inch display, touch control alphanumeric keypad Instead of standard equipment > 19-inch LCD display
	9001056	**Top surface for Siemens control**	· from version 4.7 Informationen: „OP 015 / OP 019 black“ on page 114
	Informationen Sinumerik„OP 015 / OP 019 black“ on page 114		
NEW 3	9001050	**Measuring cycles license**	· SIEMENS control 828D/840D sl
	9001051	**Software DXF-Viewer/Reader**	· from version 4.7
4	351133014	**Touch probe for tool measurement, Renishaw TS 27R**	· Standard probe, precise tool length and diameter measurement, checking of rotating tools without wear on the tool or probe insert
	351133016	**Touch probe with optical signal transmission, Renishaw OMP60**	· Infrared transmission through 360° at an angle of 90° to the spindle axis; reduces tooling times by up to 90% · Reduces scrap
	351133017	**Machine preparation** Renishaw OMP60	
5	Only ex warehouse Germany 9001041	**Touch probe for tool measurement, Renishaw OTS**	· Optical transmission module OMI-2T · OTS tool setter for tool measurement · Measuring cycle license, Assembly
	9001040	**Touch probe with optical signal transmission, Renishaw OMP40**	· OMP40-2 probe with optical recording, OMP 40/400 · Straight probe insert PS3-1C · Optical transmission module OMI-2T · Measuring cycle license, Assembly
	9001042	**Renishaw OTS probe and Renishaw OMP40-2 probe**	· OMP40-2 probe with optical recording, OMP 40/400 · Optical transmission module OMI-2T · OTS tool setter for tool measurement · Measuring cycle license, Assembly
5	351133015	**Zero contact laser tool control system, Renishaw NC4**	· Compact, two-axis, touchless tool control system · Only one M command required
	351133018	**Machine preparation** Renishaw NC4	
6	351133009	**Air conditioner**	· Instead of standard equipment > heat exchanger
7	351133003	**Oil skimmer**	· Separation of non-emulsified a stranger by skimming off · Separation of the solids by settling in the sump
8	351133004	**Power transformer**	· for custom voltage · Weight 147 kg

OPTimill® F 410

PREMiUM line

The OPTIMUM PREMiUM CNC milling machine is characterised by performance, speed, precision and a long service life

- Heavy duty version
- High productivity
- Precision linear guide on all axes
- Tool changer, double arm grab with 24 tool slots
- Precision ground, prestressed, high-performance ball screws (Ø 40 mm x P12 x C3) on all axes
- Main spindle SK40, with max. spindle speed up to 10,000 rpm as standard
- Main spindle with belt drive minimises vibrations, as well as heat and noise development
- Torsion free machine base thanks to strong ribbing
- Router table and machine base made of premium cast meehanite, low vibration
- High-torque servodrives on all three axes, mounted directly on the ball screws
- Precision ground router table with five T-slots
- Chip conveyor, belt-type
- Coolant system with 4 bar output, 210 litre coolant tank and chip flushing system
- Cleaning gun
- RJ45 plug-in connection, USB connection and power connection 230 V
- Telescopic guide rail covers on all three axes
- Closed cabinet with integrated heat exchanger; optimal temperature even in case of high ambient temperatures; prevents dirt particle penetration
- Spindle oil cooler
- Oil skimmer
- Two-year SIEMENS warranty included

"Warranty extension" on page 110

INCLUDING

Safety Integrated
Residual material detection and processing
ShopMill work step programming
Managing network drives
3-D simulation
Simultaneous recording

SIEMENS control

SINUMERIK 828D

Information "SINUMERIK 828D" on page 110

Siemens SAFETY INTEGRATED
Set up work with open doors

Including spindle oil cooler

Fig. F 410

The CNC-machine complies with standard DIN EN 55011: class C1 (Use only in industrial areas)

Model	F 410
Article no.	3511240
Machine data	
Electrical connection	400 V / 3 Ph ~50 Hz
Total connected load	44 KVA
Milling spindle	
Drive motor	13 kW S1
Drive motor torque	70 Nm
Spindle taper	SK40 DIN 69871
Cooling lubricant system	
Motor coolant pumps, 2 pcs.	1.27 kW each
Coolant pump motor, 1 pc.	750 W
Flow rate	66 - 100 l/min
Tank capacity	210 litres
End mill size	
Max. sensor head size	Ø 63 mm
Max. shaft milling cutter size	Ø 32 mm
Milling precision	
Repetition accuracy	± 0.005 mm
Positioning accuracy	± 0.005 mm
Tool changer	
Number of tool slots	24 tools
Max. tool size	130 mm
Max. tool length	300 mm
Max. tool weight	8 kg
Max. tool diameter adjacent slots free	125 mm
Max. tool diameter	80 mm
Tool change time tool to tool	2 seconds
Strokes	
X axis	1,300 mm
Y axis	680 mm
Z-axis	730 mm
Axis feed drive	
Milling feed X, Y, Z axis	10,000 mm/min.
Motor torque	
X axis/Y axis	18 Nm
Z-axis	16 Nm
Rapid mode	
X axis/Y axis	30,000 mm/min
Z-axis	24,000 mm/min
Speed range	
Speeds*	10 - 10,000 rpm
Pneumatic system	
Air pressure	6 bar
Milling table	
Clearance spindle to table	100 - 830 mm
Table length x width	1,700 x 600 mm
T-slot size/amount/distance	18 mm / 5 / 100 mm
Max. load	1,000 kg
Dimensions	
Length x width x height	4,200 x 2,720 x 3,130 mm
Overall weight	6,600 kg

Dimensions

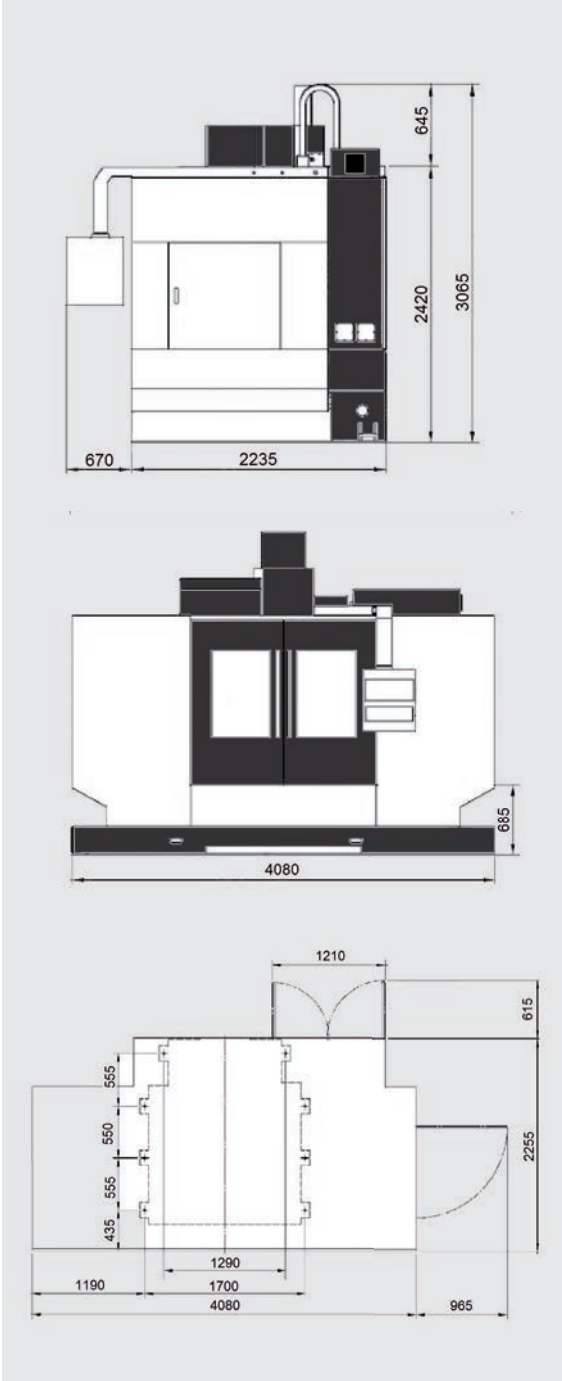

Standard equipment	
· Double arm grab - 24 slots	· Chip conveyor, belt-type
· Coolant gun	· Chip carriage
· Chip flushing system	· EMC
· Halogen lamp	· Heat exchanger
· Six machine feet	· Coolant pump 4 bar
· Spindle oil cooler	· Oil skimmer

Accessories	Article no.
Starter kit SK 40 / DIN 69871	3536109
Information "Starter set SK40/DIN 69871" on page 121	

* Please note that the maximum spindle speed has to be reduced by approximately 20% in continuous operation

- We urgently recommend initial training by our qualified staff.
"CNC introductory training" on page 100

OPTImill® F 410

STANDARD EQUIPMENT

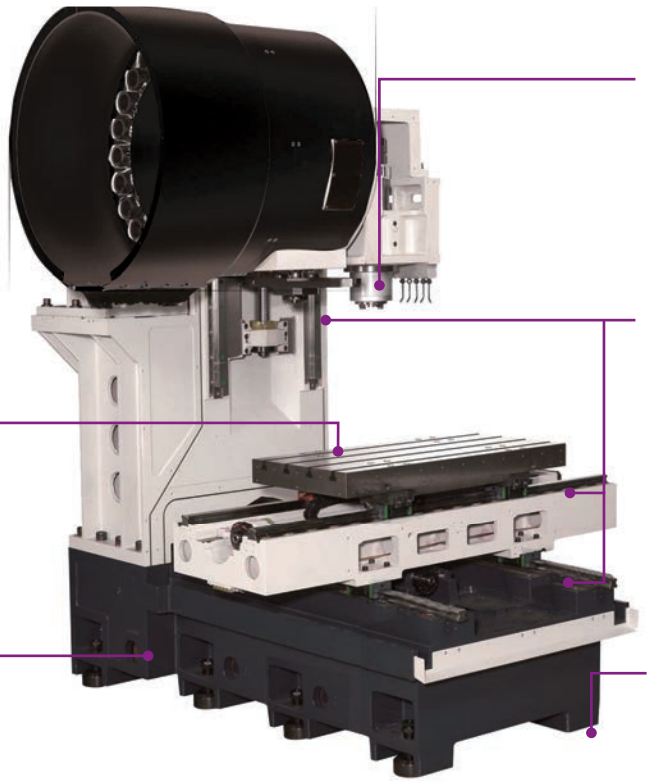

Spindle
- SK 40 DIN 69871
- Spindle speed
- 10,000 rpm standard

Linear guide
- Fast rapid motion speeds 30,000 rpm on X and Y axis and 24,000 mm/min on Z axis

Milling table
- Solid, precise and generously dimensioned
- Workpiece mounting surface 1,200 x 520 mm
- Precise surface finish
- Quality cast meehanite
- Five T-slots

Base body
- Quality cast with ribbed design

Machine feet
- Optimal machine levelling

Heat exchanger
- Closed cabinet with smart cooling management
- Optimal temperature even in case of high ambient temperatures
- Prevents dirt particles entering

Tool changer system
- Tool changer, double arm grab with 24 tool slots
- Max. tool length 300 mm

Chip carriage
- Pivoting
- rollable
- L x W x H: 606 x 260 x 500 mm
- Capacity 65 litres

Handwheel
- Electronic
- Portable
- Substantially facilitates running in of programs
- Emergency stop button
- Confirm button

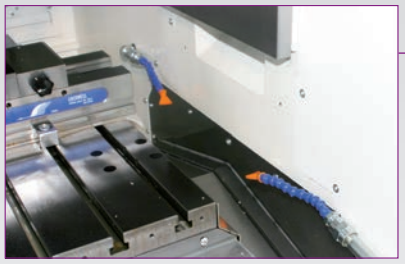

Chip flushing system
- Powerful chip flushing system for cleaning the workspace and workpiece

Laser measuring
- Guaranteed repetition and positioning accuracy

Special equipment can only be ordered ex works. Contact your dealer for pricing and further options, or mail us on: info@optimum-maschinen.de

SPECIAL EQUIPMENT

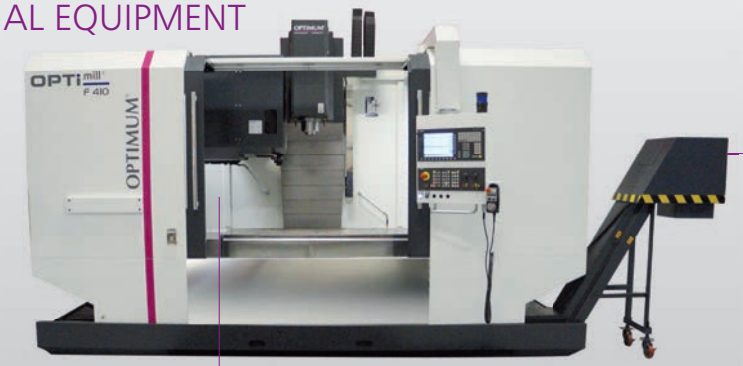

6 Swarf conveyor

7 Power transformer

1 Tool changer

2 Coolant true spindle

3 Fourth and fifth axis

4 Tool probe

5 Tool control system

1	351124010	**Double arm grab tool changer with 30 tool slots**	· Instead of standard equipment > double arm grab tool changer with 24 tool slots
2	351124008	**Coolant true spindle CTS** 20 bar	· with integrated power unit (we recommend an extraction)
	351124009	**Coolant true spindle CTS** 20 bar	· With external power unit: tank capacity 165 litres (we recommend an extraction)
	351124003	**Coolant true spindle CTS** 70 bar	· With external power unit: tank capacity 165 litres (we recommend an extraction)
3	351124022	**Fourth axis complete kit**	· Including 3-jaw lathe chuck Ø 200 mm, tailstock, SIEMENS motor, assembly · Safety software for collision avoidance
	351124019	**Machine preparation** - fourth axis	
	351124016	**Fifth axis complete kit**	· Including 3-jaw lathe chuck Ø 200 mm, tailstock, SIEMENS motor, assembly
	351124020	**Machine preparation** - fifth axis	
"Technical data fourth axis and fifth axis" on page 54			
4	Only ex warehouse Germany 9001041	**Touch probe for tool measurement, Renishaw OTS**	· Optical transmission module OMI-2T · OTS tool setter for tool measurement · Measuring cycle license, Assembly
	9001040	**Touch probe with optical signal transmission, Renishaw OMP40**	· OMP40-2 probe with optical recording, OMP 40/400 with SK40 · Straight probe insert PS3-1C · Optical transmission module OMI-2T · Measuring cycle license, Installation
	9001042	**Renishaw OTS probe and Renishaw OMP40-2 probe**	· OMP40-2 probe with optical recording, OMP 40/400 with SK40 · Optical transmission module OMI-2T OTS tool setter for tool measurement · Measuring cycle license, Installation
4	351124012	**Touch probe for tool measurement, Renishaw TS 27R**	· Standard probe, precise tool length and diameter measurement, checking of rotating tools without wear on the tool or probe insert
	351124014	**Touch probe with optical signal transmission, Renishaw OMP60**	· Infrared transmission through 360° at an angle of 90° to the spindle axis; reduces tooling times by up to 90% · Reduces scrap
	351124017	**Machine preparation** Renishaw OMP60	
5	351124013	**Zero contact laser tool control system, Renishaw NC4**	· Compact, two-axis, touchless tool control system · Only one M command required
	351124018	**Machine preparation** Renishaw NC4	
6	351124011	**Swarf conveyor Chip conveyor version**	· Instead of standard equipment · Chip conveyor, belt-type
7	351124015	**Power transformer**	· for custom voltage · Weight 147 kg
	9001050	**Measuring cycle license**	· SIEMENS Control 828D/840D sl
NEW	9001051	**Software DXF-Viewer/Reader**	· from Version 4.7
NEW	9001056	**Top surface for Siemens control**	· from Version 4.7

OPTImill® F 411 HSC

PREMiUM line

Efficient OPTIMUM PREMiUM High Speed machining center, optionally with four spindle speeds, provides the ideal solution for your task

- Heavy duty version
- High productivity
- Precision linear guide on all axes
- Fast rapid motion speed of 42 m/min on all axes
- Tool changer, double arm grab with 30 tool slots
- Precision ground, prestressed, high-performance ball screws (Ø 40 mm x P16 x C3) on all axes
- High-speed spindles
  - 12,000 / 15,000 rpm direct drive
  - 18,000 / 24,000 rpm electrical insert spindle
- Fast work feed up to 10 m/min
- High-torque servodrives on all three axes, mounted directly on the ball screws
- Spindle borne on P5 precision bearings and permanently lubricated
- Coolant true spindle 20 bar (we recommend an extraction)
- Coolant unit with chip flushing system and built-in coolant tank
- Chip conveyor, screw auger type ensures efficient chip discharge
- Cleaning gun
- Automatic centralised lubrication and minimum level warning
- RJ45 plug-in connection, USB connection and power connection 230 V
- Telescopic guide rail covers on all three axes
- Closed cabinet with integrated heat exchanger; optimal temperature even in case of high ambient temperatures; prevents dirt particle penetration
- Spindle oil cooling
- Two years Repair service contract including
- more "Siemens service repair contracts (RSV)" on page 112

INCLUDING

Safety Integrated
Residual material detection and processingfor contour pockets and tie-down
ShopMill work step programming
Managing network drives
3-D simulation
Advanced surface
Spline interpolation
Transmit and sleeve surface transformation
Measuring cycles
Simultaneous recording
HMI user memory on CF card

SIEMENS control

SINUMERIK 840D sl

Information "SINUMERIK 840D sl" on page 112

SIEMENS SAFETY INTEGRATED
Set up work with open doors

PREMIUM

Including spindle oil cooler

Fig. F 411 HSC

The CNC-machine complies with standard DIN EN 55011: class C1 (Use only in industrial areas)

Model	F 411HSC 12	F 411HSC 18
Article no.	3511340	3511344
Model	**F411HSC 15**	**F 411HSC 24**
Article no.	3511342	3511346
Machine data		
Electrical connection	400 V / 3 Ph ~50 Hz	
Total connected load	62,5 KVA	
Milling spindle		
Drive motor	30 kW S1 operation; 20 kW	
Drive motor torque	250 Nm	
Spindle taper F 411HSC 12 / F 411HSC 15	SK 40 DIN 69871	
Spindle taper F 411HSC 18 / F 411HSC 24	HSK 63 DIN 69893	
Throat	745 mm	
Cooling lubricant system		
Motor coolant pumps, 3 pcs.	850 W	
Flow rate	60 l/min.	
Tank capacity	426 litres	
Milling precision		
Repetition accuracy	± 0.005 mm	
Positioning accuracy	± 0.005 mm	
Tool changer		
Number of tool slots	30 tools	
Max. tool diameter	75 mm	
Max. tool diameter (adjacent slots free)	125 mm	
Max. tool length	300 mm	
Max. tool weight	8 kg	
Tool change time tool to tool	2 seconds	
Strokes		
X axis	1,200 mm	
Y axis	730 mm	
Z-axis	650 mm	
Axis feed drive		
Milling feed X, Y, Z axis	10,000 mm/min.	
Rapid mode		
X, Y, Z axis	42,000 mm/min.	
Motor torque		
X axis	11 Nm	
Y axis	11 Nm	
Z-axis	27 Nm	
Speed range		
Speed **F 411HSC 12**	**12,000 rpm**	
Speed **F 411HSC 15**	**15,000 rpm**	
Speed **F 411HSC 18**	**18,000 rpm**	
Speed **F 411HSC 24**	**24,000 rpm**	
Pneumatic system		
Air pressure	6 bar	
Air consumption	400 l/min.	
Milling table		
Clearance spindle to table	100 – 750 mm	
Throat	745 mm	
Table length x width	1,400 x 710 mm	
T-slot size/amount/distance	18 mm / 5 / 100 mm	
Max. load	1,000 kg	
Dimensions		
Length with/without chip conveyor	3,600 / 4,237 mm	
width x height	2,861 x 3,285 mm	
Overall weight	10,500 kg	

Accessories	Article no.
Starter kit HSK A-63	3536110
Information"Starter set HSK A-63" on page 122	
Starter kit SK 40 / DIN 69871	3536109
Information "Starter set SK40/DIN 69871" on page 121	

* Please note that the maximum spindle speed has to be reduced by approximately 20% in continuous operation

Dimensions

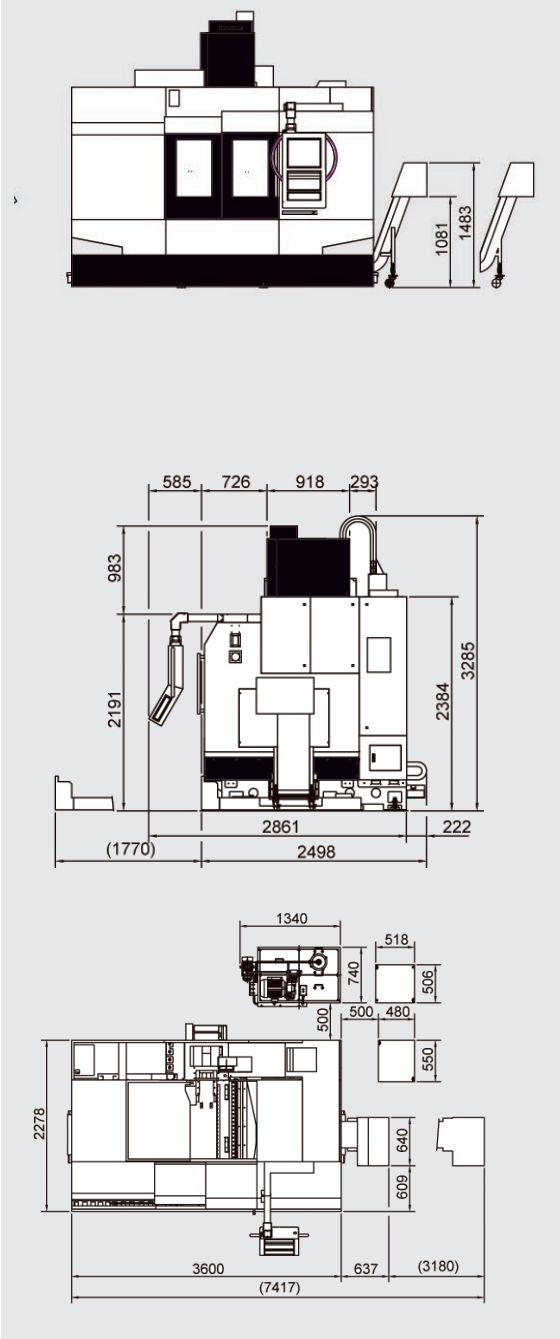

Standard equipment
· Tool changer, double arm grab with 30 tool slots
· Coolant gun
· Chip flushing system
· Halogen lamp
· Six machine feet
· Spindle oil cooler
· Chip conveyor, screw auger type
· Chip carriage
· EMC
· Heat exchanger
· Coolant true spindle CTS 20 bar internal (we recommend an extraction)
· Pneumatic counterweight
· Automatic lubrication system
· Technology package milling SINUMERIK MDynamics

OPTImill® F 411 HSC

STANDARD EQUIPMENT

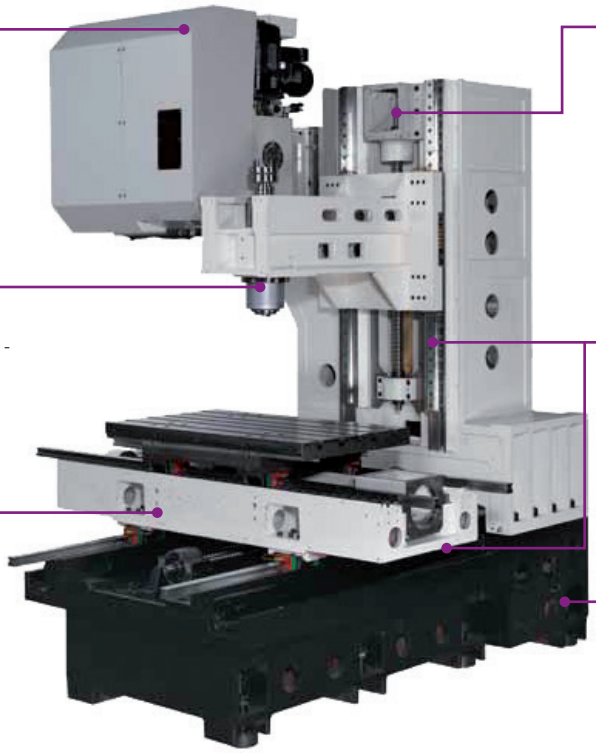

Cast body
- Premium cast meehanite, low vibration

Spindle
- SK 40 DIN 69871
- Four different spindle speeds - optionally between 12,000 rpm and 24,000 rpm

Base body
- Torsion free premium cast machine base thanks to strong ribbing

Servomotors
- Mounted directly on the ball screw
- Improves positioning accuracy
- Orbital spindles are precision centered
- Prestressed nuts, each borne by precision bearings
- Automatic oil lubrication of spindles
- Grease lubrication system for bearings

Precision liner roller guides
- Fast rapid motion speed of 42,000 rpm on all three axes

Machine feet
- 6 pcs.
- Optimal machine levelling

Heat exchanger
- Closed cabinet with smart cooling management
- Optimal temperature even in case of high ambient temperatures
- Prevents dirt particles entering

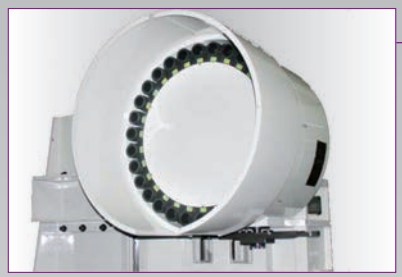

Tool changer system
- Tool changer, double arm grab with 30 tool slots
- Max. tool length 300 mm
- User-friendly tooling from the rear

Handwheel
- Electronic
- Portable
- Substantially facilitates running in of programs
- Emergency stop button
- Confirm button

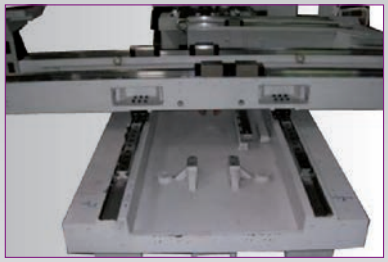

Y axis
- Extra wide guide rails, 700 mm
- Permanent load bearing capability

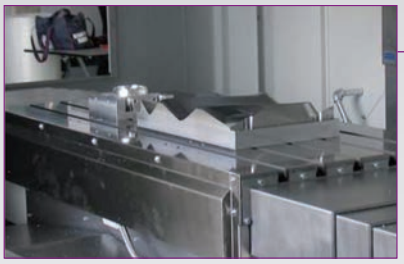

Milling table
- Solid, precise and generously dimensioned
- Workpiece mounting surface
- 1,400 x 710 mm
- Precise surface finish
- Five grooves

Laser measuring
- Guaranteed repetition and positioning accuracy

Special equipment can only be ordered ex works. Contact your dealer for pricing and further options, or mail us on: info@optimum-maschinen.de

SPECIAL EQUIPMENT

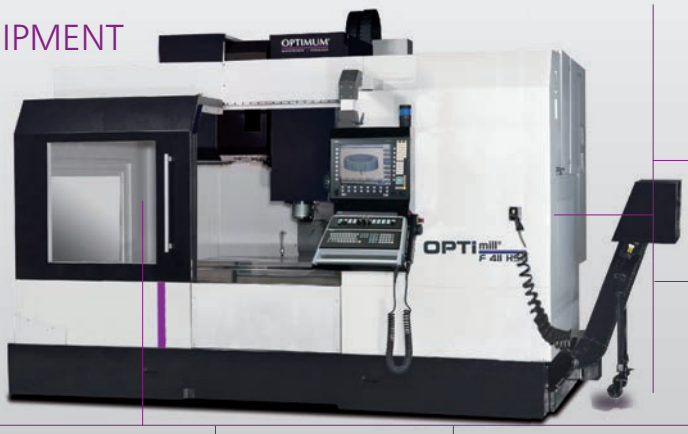

7 Power transformer

6 Oil skimmer

1 Coolant true spindle

2 Fourth and fifth axis

3 Control panel

4 Tool probe

5 Tool control system

1	351134001	**Coolant true spindle CTS** 20 bar	· External unit; tank capacity 165 litres (we recommend an extraction)
	351134002	**Coolant true spindle CTS** 70 bar	· External unit; tank capacity 165 litres (we recommend an extraction)
2	351134005	**Fourth axis complete kit**	· Including three-jaw lathe chuck Ø 200 mm, tailstock, SIEMENS motor, assembly · Safety software for collision avoidance
	351134007	**Machine preparation** - fourth axis	
	351134006	**Fourth and fifth axis complete kit**	· Including 3-jaw lathe chuck Ø 200 mm, tailstock, SIEMENS motor, assembly
	351134008	**Machine preparation**	· Fourth and fifth axis
i	"Technical data fourth axis and fifth axis" on page 54		
NEW 3	351134020	**Sinumerik control panel OP 019 black**	19-inch display, touch control Instead of standard equipment > 19-inch LCD display
	351134019	**Sinumerik control panel OP 015 black**	19-inch display, touch control alphanumeric keypad Instead of standard equipment > 19-inch LCD display
	9001056	**Top surface for Siemens control**	· from version 4.7 Informationen: „OP 015 / OP 019 black“ on page 114
i	Informationen Sinumerik„OP 015 / OP 019 black“ on page 114		
NEW 3	9001050	**Measuring cycles license**	· SIEMENS control 828D/840D sl
	9001051	**Software DXF-Viewer/Reader**	· from version 4.7
4	351134014	**Touch probe for tool measurement, Renishaw TS 27R**	· Standard probe, precise tool length and diameter measurement, checking of rotating tools without wear on the tool or probe insert
	351134016	**Touch probe with optical signal transmission, Renishaw OMP60**	· Infrared transmission through 360° at an angle of 90° to the spindle axis; reduces tooling times by up to 90% · Reduces scrap
	351134017	**Machine preparation** Renishaw OMP60	
5	Only ex warehouse Germany 9001041	**Touch probe for tool measurement, Renishaw OTS**	· Optical transmission module OMI-2T · OTS tool setter for tool measurement · Measuring cycle license, Assembly
	9001040	**Touch probe with optical signal transmission, Renishaw OMP40**	· OMP40-2 probe with optical recording, OMP 40/400 · Straight probe insert PS3-1C · Optical transmission module OMI-2T · Measuring cycle license, Assembly
	9001042	**Renishaw OTS probe and Renishaw OMP40-2 probe**	· OMP40-2 probe with optical recording, OMP 40/400 · Optical transmission module OMI-2T OTS tool setter for tool measurement · Measuring cycle license, Assembly
5	351134015	**Zero contact laser tool control system, Renishaw NC4**	· Compact, two-axis, touchless tool control system · Only one M command required
	351134018	**Machine preparation** Renishaw NC4	
6	351134009	**Air conditioner**	· Instead of standard equipment > heat exchanger
7	351134003	**Oil skimmer**	· Separation of non-emulsified a stranger by skimming off · Separation of the solids by settling in the sump
8	351134004	**Power transformer**	· for custom voltage · Weight 147 kg

OPTImill® FU 5

PREMiUM line

OPTIMUM PREMiUM 5-axis universal machining centre with SIEMENS 840D sl control

- Heavy duty version
- High productivity
- Tool changer double arm with 32 tool stations in the standard (also available with 48 or 60 tool stations)
- FU 5-600 HSC12 / 15 with In-Line spindle. These are spindles which have a transmission mechanism of the drive motor. The connection to the spindle is performed directly.
- FU 5-600 HSC18 / 24 with Built-in spindle. The spindles are manufactured with built-in drive motor. No transmission mechanism required. For high speeds at low vibration and noise during operation
- Heidenhain linear encoders in all three axes
- Precision linear guide on all axes
- In all five axes high-torque servo drives
- Fast rapid motion speed of 36 m/min on the X / Y / Z axis
- Telescopic guide rail covers on all three axes
- Precision ground, prestressed, high-performance ball screws (Ø 40 mm x P12 x C3) on the X / Y / Z axis
- Fast work feed up to 10 m/min on the X / Y / Z axis
- High-torque servodrives on all five axes
- Spindle borne on P5 precision bearings and permanently lubricated
- Kinematic measuring cycle CYCLE996 - allows the measurement of the axis kinematics of machine tools with several rotary axes without previous major time and cost
- Coolant unit with chip flushing system and built-in coolant tank
- Cleaning gun
- Coolant spindle 20 bar (we recommend an extraction)
- Chip conveyor, belt type ensures efficient chip discharge
- Automatic centralised lubrication
- Portable electronic handwheel
- Additional USB Interface in control panel
- RJ45 plug-in connection, USB connection and power connection 230 V
- Water cycle cooling unit for fast winding and ballscrew with ready coolant with corrosion protection. Prevents electrochemical corrosion protects aluminum, nonferrous and ferrous metals and galvanized parts are not affected
- Two years Repair service contract including
- "Siemens service repair contracts (RSV)" on page 112

INCLUDING

Safety Integrated
Residual material detection and processingfor contour pockets and tie-down
ShopMill work step programming
MDynamics 5-axis
Managing network drives
3-D simulation
Advanced surface
Spline interpolation
Transmit and sleeve surface transformation
Measuring cycles
Simultaneous recording
HMI user memory on CF card
3D tool radius compensation
CYCLE996

SIEMENS control

SINUMERIK 840D sl with OP 019 black Multitouch control panel

"SINUMERIK 840D sl" on page 112
„OP 019 black“ on page 114

Fig. 5 FU with SCHUNK vice

The CNC-machine complies with standard DIN EN 55011: class C1 (Use only in industrial areas)

Model	FU 5-600 HSC 12	FU 5-600 HSC 18
Article no.	3511380	3511384
Model	**FU 5-600 HSC 15**	**FU 5-600 HSC 24**
Article no.	3511382	3511386
Machine data		
Electrical connection	400 V / 3 Ph ~50 Hz	
Total connected load	70 KVA	
Milling spindle		
Drive motor	20 kW (S1) / 30 kW (S6)	20 kW (S1) / 25 kW (S6)
Drive motor torque	96 Nm	32 Nm
Spindle taper	SK 40 DIN 69871	HSK 63 DIN 69893
Milling table		
Rotary table diameter	600 mm	
Swivel axis A	± 120⁰	
Rotation axis C	360⁰	
T-slot size/amount/distance	14 mm / 7 / 75 mm	
Max. load	600 kg	
Milling precision		
Repetition accuracy	± 0.004 mm	
Positioning accuracy	± 0.008 mm	
Tool changer		
Number of tool slots	32 tools	
Max. tool diameter	78 mm	
Max. tool diameter adjacent slots free	120 mm	
Max. tool length	300 mm	
Max. tool weight	7 kg	
Tool change time Tool to tool	1.51 seconds	
Strokes		
X axis	600 mm	
Y axis	600 mm	
Z-axis	500 mm	
Axis feed drive		
Max. speed A axis	16.6 rpm	
Max. speed C axis	90 rpm	
Acceleration X, Y, Z axis	7 ms^{-2}	
Rapid motion X, Y, Z axis	36,000 mm/min.	
Speed range		
Speed	**12,000 rpm HSC 12**	**18,000 rpm HSC 18**
Speed	**15,000 rpm HSC 15**	**24,000 rpm HSC 24**
Pneumatic system		
Air pressure	6 bar	
Dimensions		
Length	3,015 mm	
width x height	4,440 x 3,000 mm	
Overall weight	9,150 kg	

Standard equipment

- Double arm grab tool changer with 32 tool slots
- Heidenhain linear encoders in all three axes
- Technology package milling SINUMERIK MDynamics five axes
- Coolant true spindle CTS 20 bar internal (we recommend an extraction)
- Chip conveyor, belt-type
- Chip carriage
- Oil skimmer
- Heat exchanger
- Machine feet
- SINUMERIK Operate
- EMC
- Chip flushing system
- Automatic lubrication system
- Water cycle cooling unit

Accessories	Article no.
Starter kit HSK A-63	3536110
Information "Starter set HSK A-63" on page 122	
Starter kit SK 40 / DIN 69871	3536109
Information "Starter set SK40/DIN 69871" on page 121	

* Please note that the maximum spindle speed has to be reduced by approximately 20% in continuous operation

Dimensions

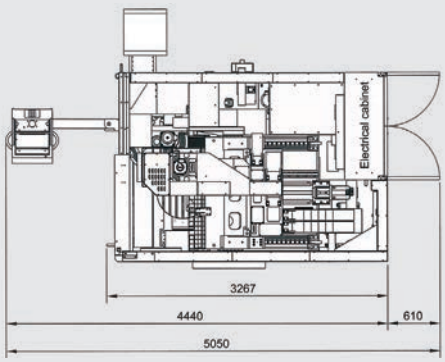

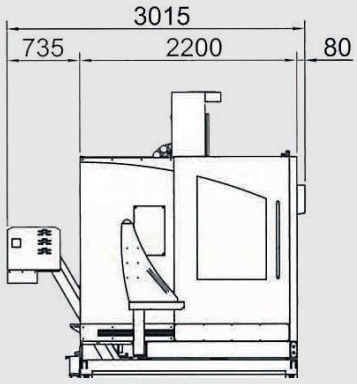

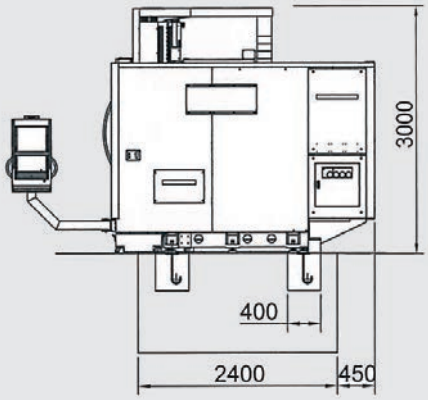

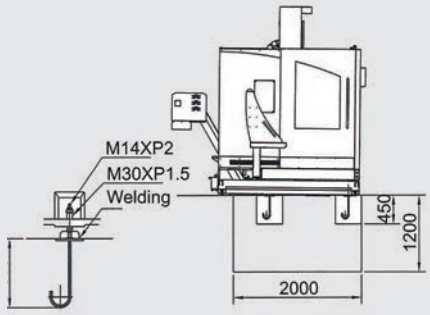

You will be fascinated! More information on the FU 5 in our video presentation on the Optimum Machines YouTube channel

OPTImill® FU 5

STANDARD EQUIPMENT

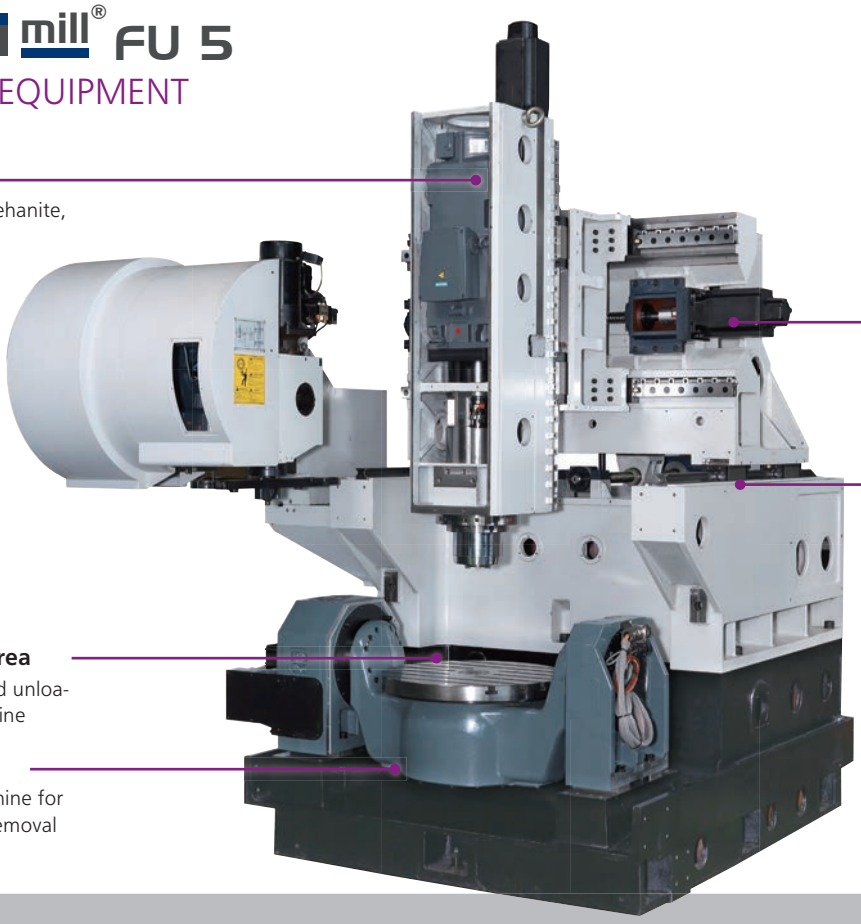

Cast body
Premium cast meehanite, low vibration

Central drive
- Y axis

Guides
- High-precision linear roller guides the X axis
- Front linear guides contain additional carriage to the dynamic stability ensure

Large work area
- for loading and unloading the machine

Chip removal
- designed machine for optimal chip removal

Spindle
Optionally
- Inline spindle 12,000 rpm or 15,000 rpm
- HF spindle 18,000 rpm or 24,000 rpm

BLUM Laser Controller (option)
- for fast, precise and automatic tool setting or identification

Swivelling table
- Load-bearing capacity of up to 600 kg
- Diameter 600 mm

A axis
- worm gear driven with brake system, offers high torque and excellent durability

C axis
- Integrated torque motor. High positioning and repetition accuracy

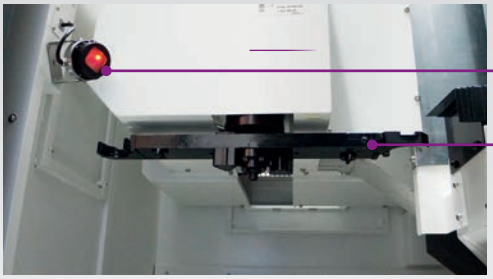

Transmitter/receiver unit (option)
- Wireless probe system for signal transmission to the transmitter/receiver

Automatic tool changer
- Double arm
- 32 tool slots
- Optional with 48 or 60 tool slots

SPECIAL EQUIPMENT

6 Tool probe

5 Air conditioner

1 Controller

2 Tool changer

3 Laser Control

4 Coolant true spindle

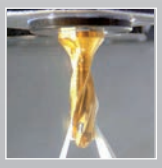

1	9001056	**Top surface for Siemens control**	· from Version 4.7
	9001051	**Software** DXF-Viewer/Reader	· from Version 4.7
	351138014	**Collision Avoidance** with SINUMERIK	· of pioneering in performance and technological bandwidth Approach to avoid collisions in the machine
2	351138003	**Coolant true spindle CTS** 20 bar	· External unit; tank capacity 165 litres (we recommend an extraction)
	351138004	**Coolant true spindle CTS** 70 bar	· External unit; tank capacity 165 litres (we recommend an extraction)
	351138005	**Coolant true spindle CTS** 20 bar Grundfos	· with oil separator, paper filter and cooling unit
3	351138009	**Double arm grab tool changer 48 tool slots**	· Instead of standard equipment > double arm grab tool changer with 32 tool slots
	351138010	**Double arm grab tool changer 60 tool slots**	· Instead of standard equipment > double arm grab tool changer with 32 tool slots
4	351138006	**BLUM LaserControl**	· for fast, precise and automatic tool setting or identification; length radius and concentricity are measured on the actual clamping system at rated speed. Tool, spindle and collet faults are directly identified and corrected. · Your benefits: highest possible manufacturing quality, minimal tooling times and maximum safety
5	351138002	**Air conditioner**	· Instead of standard equipment > heat exchanger
6	Only ex warehouse Germany 9001040	**Touch probe with optical signal transmission, Renishaw OMP40**	· OMP40-2 probe with optical recording, OMP 40/400 · Straight probe insert PS3-1C · Optical transmission module OMI-2T · Measuring cycle license · Assembly
	351138016	**Cover for housing**	· pneumatically operated opening / closing · Upper machine room cover · For extraction of the oil mist
	351138017	**Additional window**	· at right side of the machine

Special equipment can only be ordered ex works. Contact your dealer for pricing and further options, or mail us on: info@optimum-maschinen.de

TECHNICAL DATA FOURTH AXIS

Model	F 150	F 151HSC	F 311 HSC
Article no.	351121024	351131007	351133007
Model	**F 310**	**F 211 HSC**	**F 410**
Article no.	351123024	351132007	351124022
Model			**F 411 HSC**
Article no.			351134007
Dimensions "Fourth axis" on page 56			
Technical data			
Table diameter	120 mm	170 mm	200 mm
Vertical table peak height	115 mm	195 mm	160 mm
Table height horizontal	170 mm	165 mm	165 mm
Vertical overall height	193 mm	240 mm	265 mm
Passageway	30 mm	35 mm	35 mm
T-nuts size	10 mm	12 mm	12 mm
Width of guide block	14 mm	18 mm	18 mm
Servomotor	Siemens 1FK7042	Siemens 1FK7060	Siemens 1FK7060
Transmission ratio	1:60	1:90	1:90
Minimum step width	0.001°	0.001°	0.001°
Max. speed (motor : 2,000 rpm)	33.3 rpm	22.2 rpm	22.2 rpm
Pneumatic clamping force (5 bar)	120 Nm	250 Nm	250 Nm
Hydraulic clamping force (20 bar)	240 Nm	500 Nm	500 Nm
Subsystem precision	30"	20"	20"
Repetition accuracy	4"	4"	4"
Max. machining force	12"	50"	50"
Net weight	28 kg	70 kg	84 kg
Vertical 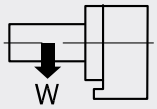	W = 35 kg	W = 100 kg	W = 125 kg
Horizontal 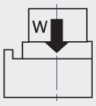	W = 75 kg	W = 200 kg	W = 250 kg
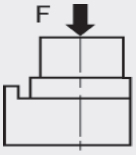	F = 800 kg	F = 1000 kg	F = 1100 kg
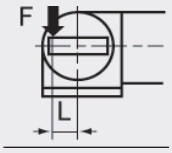	F x L = 8 kg x m	F x L = 50 kg x m	F x L = 50 kg x m
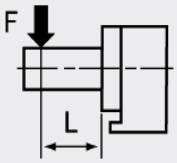	F x L = 18 kg x m	F x L = 78 kg x m	F x L = 100 kg x m

TECHNICAL DATA FIFTH AXIS

Model	F 150	F 151HSC	F 410
Article no.	351121002	351131008	351124016
Model	**F 310**	**F 211 HSC**	**F 411 HSC**
Article no.	351123016	351132008	351134008
Model		**F 311 HSC**	
Article no.		351133008	

Dimensions "Fifth axis" on page 56

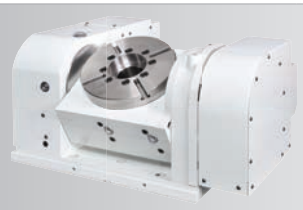

Technical data		
Table diameter	120 mm	200 mm
Vertical table peak height	150 mm	195 mm
Vertical overall height	235 mm	360 mm
Passageway	30 mm	35 mm
T-groove size	10 mm	12 mm
Width of guide block	14 mm	18 mm
Servomotor rotating	Siemens 1FK7042	Siemens 1FK7060
Servomotor tilting	Siemens 1FK7042	Siemens 1FK7063
Gearbox rotating	1:72	1:90
Gearbox tilting	1:120	1:180
Minimum step width	0.001°	0.001°
Max. speed rotating/tilting	27.8 rpm / 16.7 rpm	22.2 rpm / 11.1 rpm
Tilt angle	-20°~120°	-110°~110°
Rotation axis		
Pneumatic clamping force (5 bar)	120 Nm	250 Nm
Hydraulic clamping force (20 bar)	240 Nm	500 Nm
Subsystem precision	30"	20"
Repetition accuracy	4"	4"
Pneumatic resistance	120 Nm	250 Nm
Hydraulic resistance	240 Nm	500 Nm
Subsystem precision	60"	50"
Net weight	105 kg	240 kg
Vertical 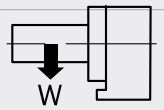	W = 20 kg	W = 50 kg
Horizontal 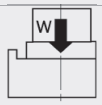	W = 35 kg	W = 100 kg
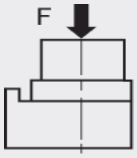	F = 400 kg	F = 500 kg
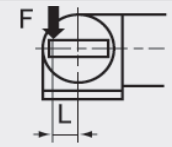	F x L = 12 kg x m	F x L = 16.5 kg x m
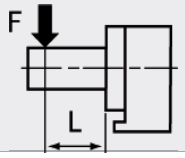	F x L = 10 kg x m	F x L = 15 kg x m

Special equipment can only be ordered ex works. Contact your dealer for pricing and further options, or mail us on: info@optimum-maschinen.de

DIMENSIONS
FOURTH AXIS

F 150 / F 310

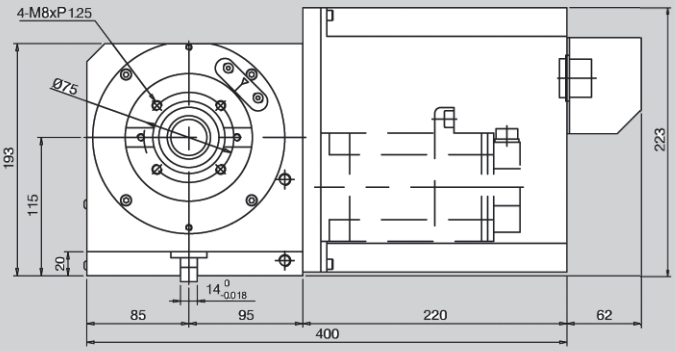

F 151HSC/F 211HSC

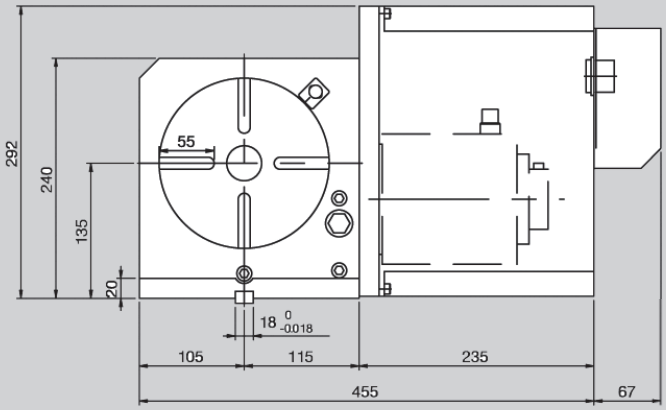

F311HSC/F410/ F411HSC

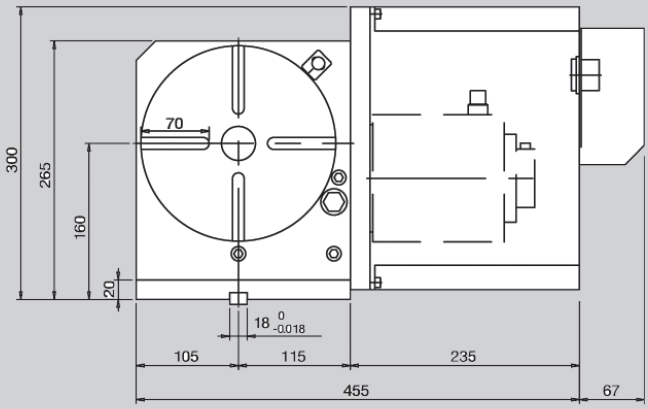

FIFTH AXIS

F 150 / F 310

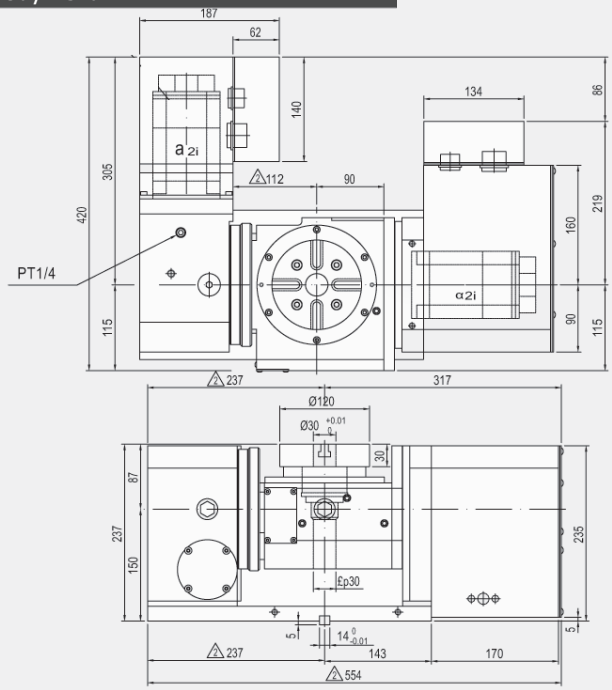

F 151HSC/F 211HSC/
F 311HSC/F 410
F 411HSC

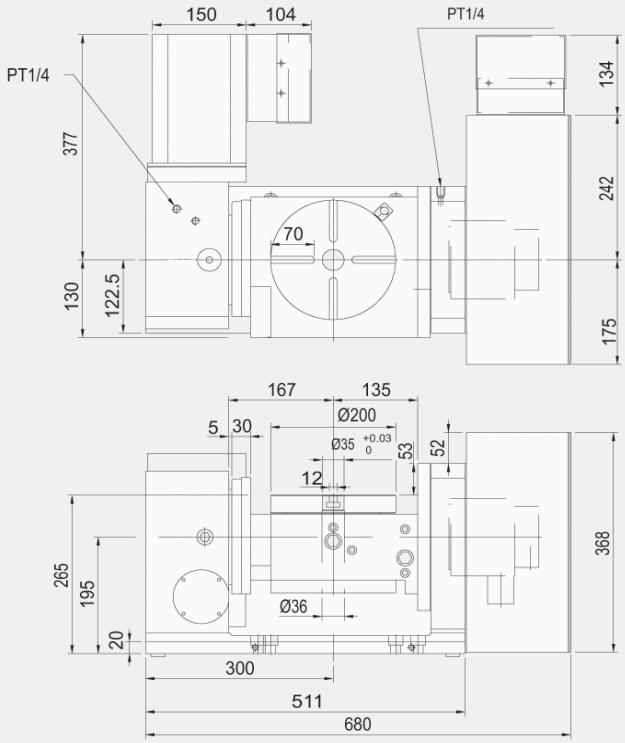

CNC lathes

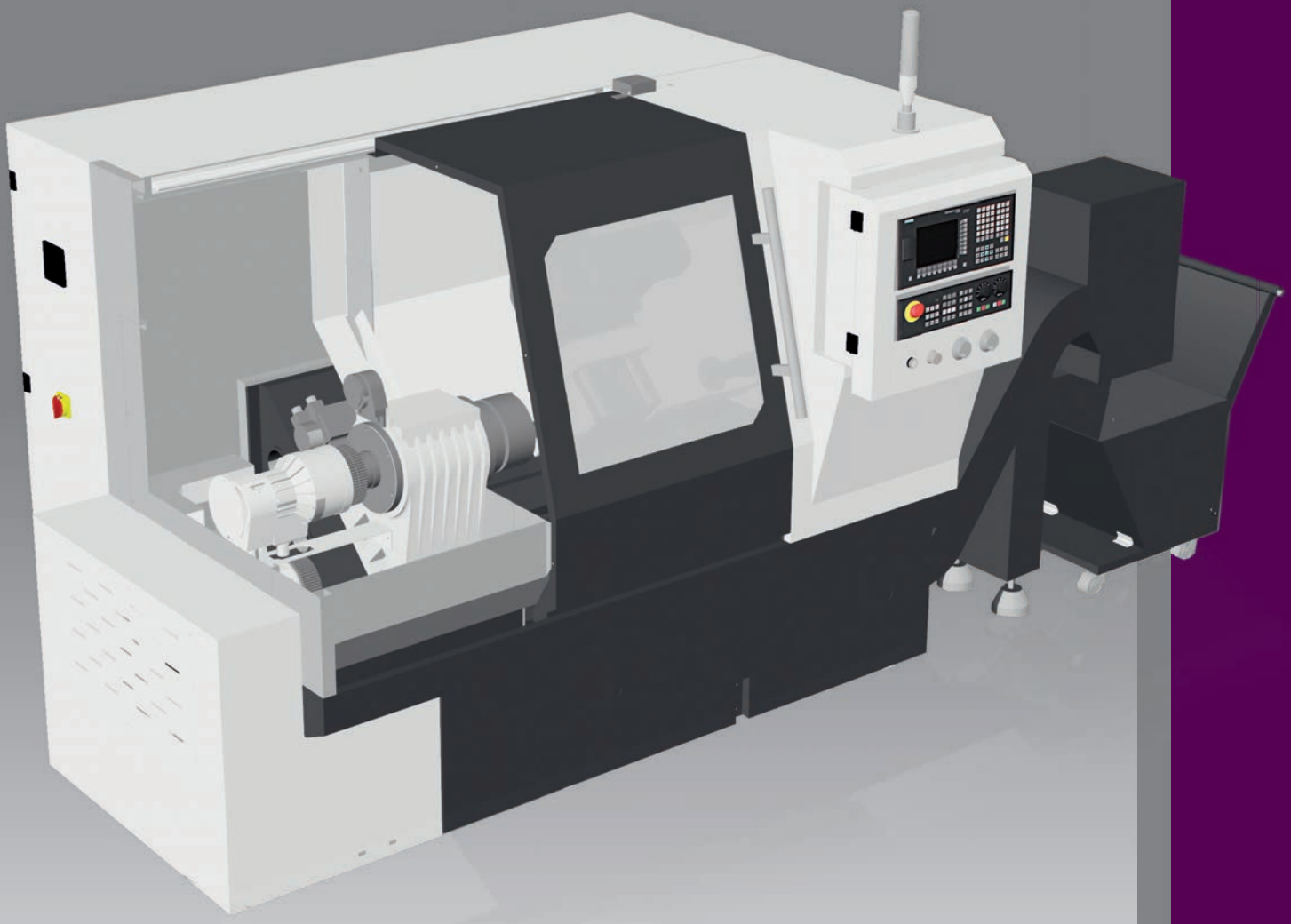

OPTI turn® L 28HS

CNC-controlled flat bed lathe

- Braced machine bed made from grey cast-iron
- Bed guide rails induction hardened (HRC 42-52) and precision ground
- Complex spindle bearing
- Emergency stop push button
- Central lubrication
- Clockwise/Anti-clockwise rotation
- Reference switch
- Maintenance-friendly protective housing
- Access flap on rear for maintenance
- Safety switch on front sliding door
- Turret located behind the lathe centre (left turning tool)
- Software package "SINUMERIK 808D on PC" included. (Practical training software allowing workpieces to be programmed and simulated on a PC offline. Download for free on www.cnc4you.com)
- Two-year SIEMENS warranty included

SIEMENS control

SINUMERIK 808D

Information "SINUMERIK 808D" on page 104

Fig. L 28HS

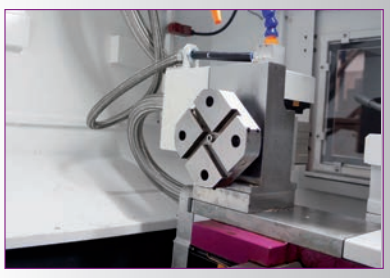

Tool turret
- for 8 tools

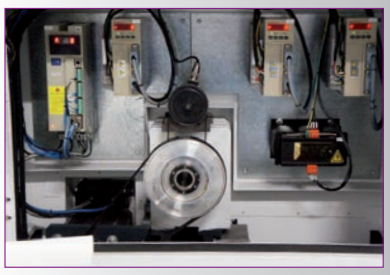

Spindle
- Incremental transducer for spindle positioning (thread tapping)
- Large spindle hole

Coolant system
- Pulls out
- Easy chip disposal

The CNC-machine complies with standard DIN EN 55011: class C1 (Use only in industrial areas)

Model	L 28HS
Article no.	3504210
Machine data	
Electrical connection	400 V / 3 PH ~50 Hz
Total connected load	3,75 KVA
Spindle	
Drive motor	2.2 kW
Drive motor torque	14 Nm
Torque at the spindle	28 Nm
Spindle holder	DIN 6350 A2-3
Spindle hole	Ø 32 mm
Chuck passage	Ø 32 mm
Cooling lubricant system	
Coolant pump output	95 W
Tank capacity	48 litres
Machine data	
Max. height	150 mm
Max. width	650 mm
Swing over cross slide	200 mm
Swing diameter over machine bed	300 mm
Bed width	180 mm
Speed range	
Spindle speeds	40 - 4,000 rpm
Tool turret	
Type	Servo/pneumatic
Number of tool slots	4 (square) / 4 (drill rod)
Max. chuck height, width square	12 x 12 mm
Max. chuck diameter drilling rod	Ø 16 mm
Precision	
Repetition accuracy	± 0,015 mm
Positioning accuracy	± 0,03 mm
Travel	
X axis	145 mm
Z axis	465 mm
Feed speed	
X axis	8,000 mm/min.
Z axis	8,000 mm/min.
Motor torque	
X axis	1.3 Nm
Z axis	2.4 Nm
Tailstock	
Tailstock chuck	MK2
Tailstock quill diameter	Ø 30 mm
Tailstock quill stroke	80 mm
Dimensions	
Length x width x height	1,655 x 1,485 x 1,955 mm
Overall weight	700 kg

NEW

Accessories	Article no.
· BISON Three-jaw lathe chuck cast, Ø 125 mm DIN 6350	3450230
· Monoblock jaw set, soft for three-jaw lathe chuck Ø 125 mm	3450410
· BISON Four-jaw lathe chuck cast, Ø 125 mm DIN 6350	3450234
· Monoblock jaw set, soft for four-jaw lathe chuck Ø 125 mm	3450420
· Chuck flange for lathe chuck Ø 125 mm	3450240
· Collet chuck 5C	3450238
· Lathe tool set HM 12 mm	3441213
· Cylindrical mount Ø16 mm for chuck B16	3535170

Accessories Made in EU

Dimensions

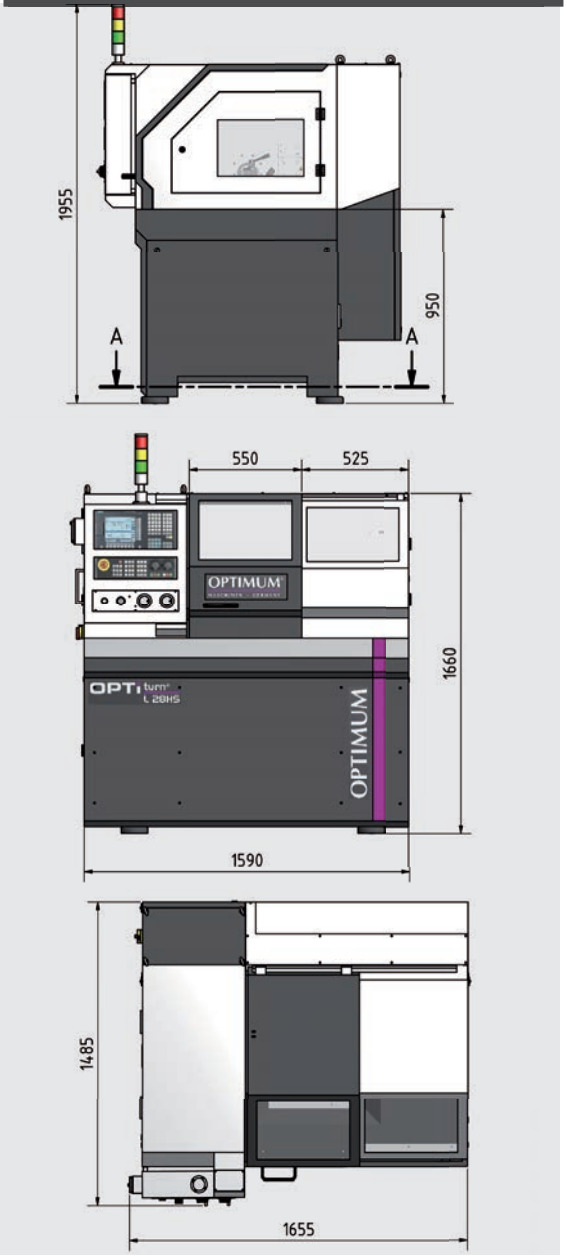

Serial equipment

- Coolant system
- Machine lamp
- Operating tool

Remember to order a lathe chuck and chuck flange

We urgently recommend initial training by our qualified staff.

Information "CNC introductory training" on page 100

OPTI turn® L 34HS

CNC-controlled flat bed lathe

- Precision workmanship
- Braced machine bed made from grey cast-iron
- Bed guide rails induction hardened (HRC 42-52) and precision ground
- Complex spindle bearing
- Emergency stop push button
- Central lubrication
- Clockwise/Anti-clockwise rotation
- Polished ball screw spindles
- Reference switch
- Maintenance-friendly protective housing
- Access flap on rear for maintenance
- Safety switch on front sliding door
- Turret located behind the lathe centre (left turning tool)
- SIEMENS feed motors
- Software package "SINUMERIK 808D on PC" included. (Practical training software allowing workpieces to be programmed and simulated on a PC offline. Download for free on www.cnc4you.com)
- Two-year SIEMENS warranty included

SIEMENS control

SINUMERIK 808D

or

SINUMERIK 808D ADVANCED

Information "SINUMERIK 808D" on page 104 and "SINUMERIK 808D ADVANCED" on page 106

Benefits: SINUMERIK 808D ADVANCED

- Closed-loop control circuit
- RJ-45 connection
- Prepared for remote maintenance
- AST function gives users an easy optimisation option in case of stricter dynamic and precision requirements
- Absolute encoder
- Greater precision

Fig. L 34HS

Tool turret

- Eight tools

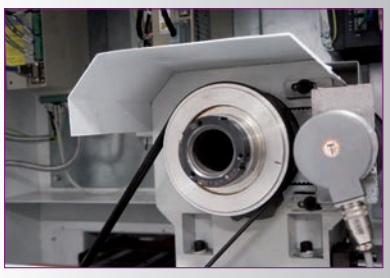

Spindle

- Incremental transducer for spindle positioning (thread tapping)
- Large spindle hole

Coolant system

- Pulls out
- Easy chip disposal

The CNC-machine complies with standard DIN EN 55011: class C1 (Use only in industrial areas)

Model	L 34HS
Article no. **SINUMERIK 808D** (Standard)	3504230
Article no. **SINUMERIK 808D ADVANCED** (Option)	3504232
Machine data	
Electrical connection	400 V / 3 Ph ~50 Hz
Total connected load	8 KVA
Spindle	
Drive motor	3.7 kW
Drive motor torque	23.6 Nm
Torque at the spindle	40 Nm
Spindle holder	DIN 6350 A2-4
Spindle hole	Ø 46 mm
Lathe chuck	Ø 160 mm
Chuck passage	Ø 42 mm
Cooling lubricant system	
Coolant pump output	95 W
Tank capacity	75 litres
Machine data	
Max. height	170 mm
Max. width	800 mm
Swing over cross slide	152 mm
Swing diameter over machine bed	340 mm
Bed width	208 mm
Speed range	
Spindle speed, speed controllable	30 - 3,500 rpm
Tool turret	
Type	Servo/pneumatic
Number of tool slots	8
Max. chuck height, width square	16 x 16 mm
Max. chuck diameter drilling rod	Ø 16 mm
Precision	
Repetition accuracy	± 0.015 mm
Positioning accuracy	± 0.03 mm
Travel	
X axis	185 mm
Z axis	540 mm
Feed speed	
X axis	6,000 mm/min.
Z axis	8,000 mm/min.
Motor torque	
X axis	4 Nm
Z axis	6 Nm
Tailstock	
Tailstock chuck	MK 3
Tailstock quill diameter	Ø 45 mm
Tailstock quill stroke	120 mm
Dimensions	
Length x width x height	1,956 x 1,475 x 1,713 mm
Overall weight	1,200 kg

Accessories	Article no.
· BISON Three-jaw lathe chuck cast, Ø 160 mm DIN 6350	3450232
· Monoblock jaw set, soft for three-jaw lathe chuck Ø 160 mm	3450412
· BISON Four-jaw lathe chuck cast, Ø 160 mm DIN 6350	3450236
· Monoblock jaw set, soft for four-jaw lathe chuck Ø 160 mm	3450422
· Chuck flange for lathe chuck Ø 160 mm	3450241
NEW · Lathe tool set HM 16 mm	3441215
· Cylindrical mount Ø16 mm for chuck B16	3535170

Accessories Made in EU

Dimensions

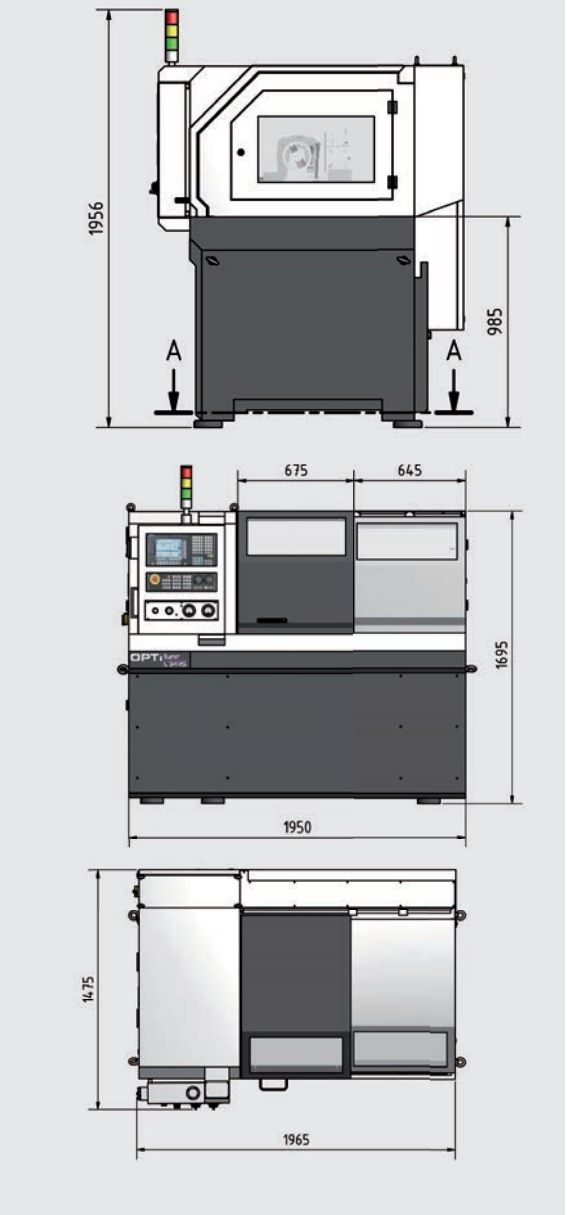

Serial equipment

- Holder for tool turret
- Machine lamp
- Coolant system
- Operating tool

Remember to order a lathe chuck and chuck flange

We urgently recommend initial training by our qualified staff.

Information "CNC introductory training" on page 100

OPTIturn® L 44

PREMiUM line

The OPTIMUM PREMiUM CNC lathe with the benefits of speed, performance, precision and a long service life

- Spindle and servo motor by SIEMENS
- Fully cladded with safety device
- Integrated coolant unit with 90 litre coolant tank
- Automatic centralised lubrication
- With max. spindle speed up to 3,500 rpm as standard
- Swivelling operating unit
- Electronic handwheels for the X and Z axis
- RJ45 plug-in connection, USB connection and power connection 230 V
- Two-year SIEMENS warranty included
- "Warranty extension" on page 108

INCLUDING

Safety Integrated
Residual material detection and machining
Shopturn work step programming
3-D simulation
Network preparation
Simultaneous recording

SIEMENS SAFETY INTEGRATED
Set up work with open doors

SIEMENS control
Sinumerik 828 D Basic T

"SINUMERIK 828 D BASIC T" on page 108

PREMIUM

Fig. L 44

The CNC-machine complies with standard DIN EN 55011: class C1 (Use only in industrial areas)

Model	L 44
Article no.	3514330
Machine data	
Electrical connection	400 V / 3 Ph ~50 Hz
Total connected load	23 KVA
Spindle	
Drive motor	8 kW S1 operation 7 kW
Drive motor torque	31 Nm
Spindle holder	DIN ISO 702-1 Nr. 5
Spindle hole	Ø 52 mm*
Cooling lubricant system	
Coolant pump output	270 W
Tank capacity	90 litres
Hydraulic system	
Motor output	750 W
Tank capacity	50 litres
Machine data	
Max. height	223 mm
Max. width	850 mm
Swing over cross slide	240 mm
Swing diameter over machine bed	446 mm
Swing in the bed bridge	520 mm
Bed width	300 mm
Hydraulic lathe chuck	Ø 150 mm
Chuck passage	Ø 40 mm
Speed range	
Spindle speed, 2-speed	10 - 3,500 rpm
Tool turret	
Hydraulic type	VDI 30
Number of tool slots	8
Max. chuck height, width square	20 x 20 mm
Max. chuck diameter drilling rod	Ø 25 mm
Precision	
Repetition accuracy	± 0,005 mm
Positioning accuracy	± 0,005 mm
Travel	
X axis	250 mm
Z axis	760 mm
Feed speed	
X axis	15,000 mm/min
Z axis	15,000 mm/min
Motor torque	
X axis	6 Nm
Z axis	8.5 Nm
Ball screw	
X axis	25 mm × P5 mm × C3
Z axis	40 mm × P5 mm × C3
Tailstock	
Tailstock chuck	MK 4
Tailstock quill diameter	52 mm
Tailstock quill stroke	165 mm
Dimensions	
Length x width x height	2,530 x 1,595 x 1,795 mm
Overall weight	2,620 kg

Starter set	VDI 30
Article no.	3536115

Information "Starter set VDI 30" on page 116

* depending on installed lathe chuck

Serial equipment	
· Tailstock end cover	· Heat exchanger
· 6 machine feet	· Hydraulic tool turret 8 tools
· Operating tool	· Hydraulic three-jaw lathe chuck Ø 150 mm
· EMC	· Hard and soft block jaws
· Joystick	

Dimensions

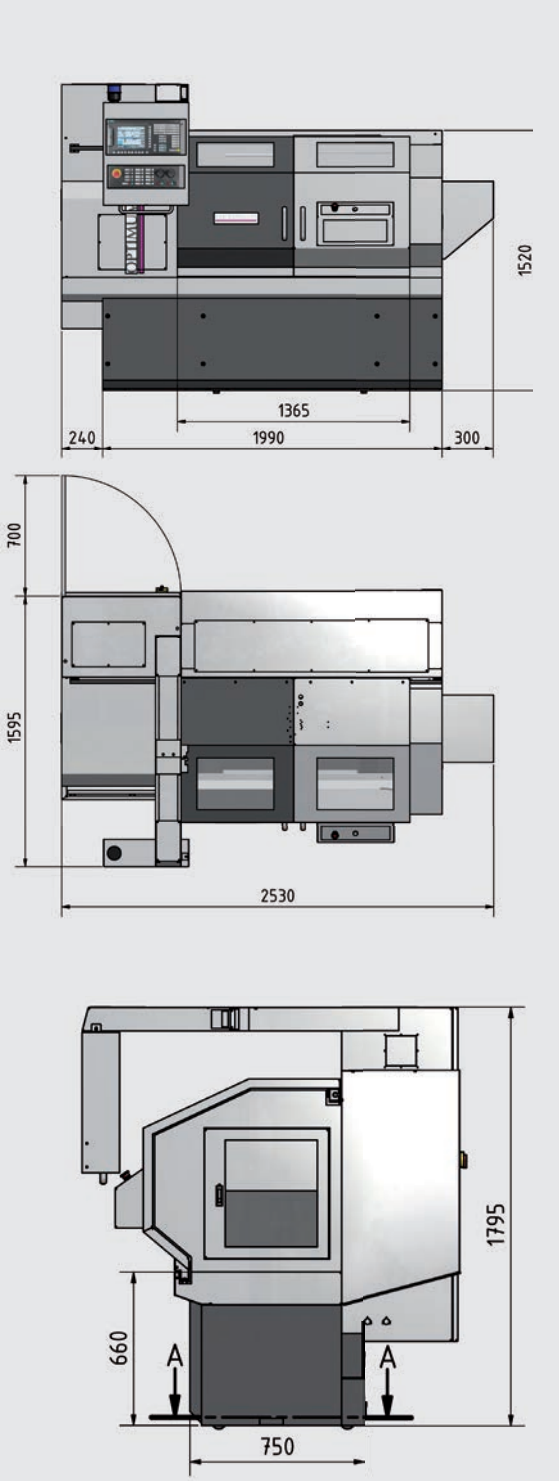

"CNC introductory training" on page 100
- We urgently recommend initial training by our qualified staff.

OPTIturn® L 44

STANDARD EQUIPMENT

Main spindle
- Solid design

Machine bed
With pronounced ribbing
- Excellent stiffness and durability

Guides
Rugged flat bed guide

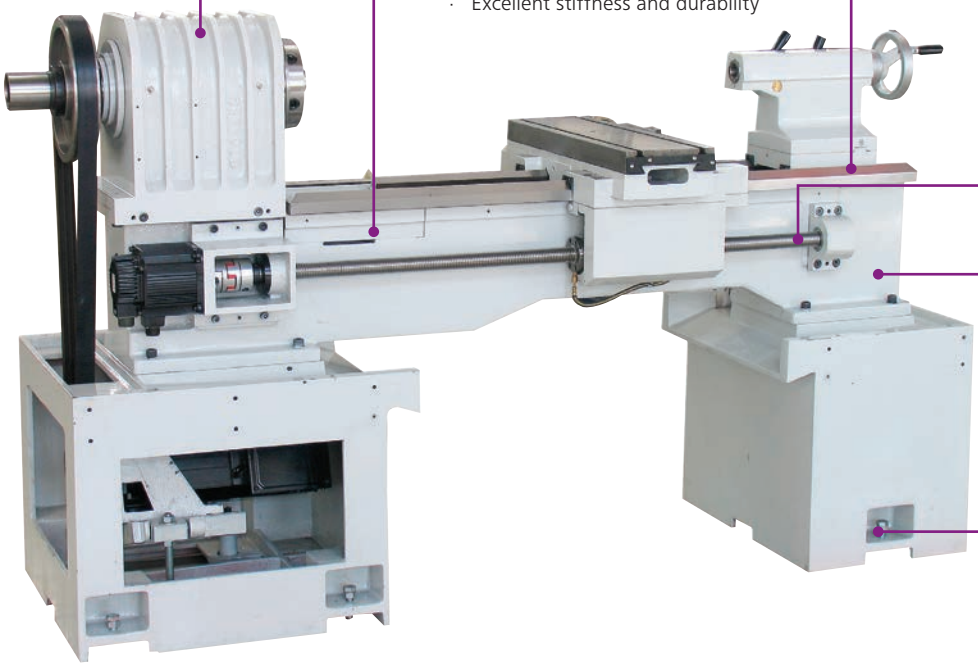

Ball screw
- Polished

Cast body
- Tempered HRC48-52 and heat-treated

Machine feet
- Six pcs.
- Optimal machine levelling

Heat exchanger
- Closed switch cabinet with smart cooling management
- Optimal temperature even in case of high ambient temperatures
- Prevents dirt particles entering

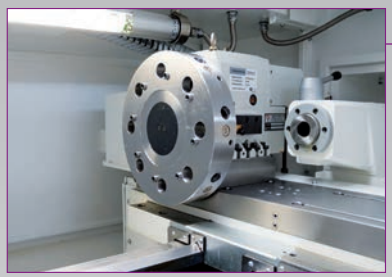

Tool changer system
- 8 tool slots
- Hydraulic VDI30 tool turret
- Max. chuck height 20 mm

Tailstock
- Generously dimensioned
- Slide with ball screw and pre-stressed nut

Hydraulic power unit
- Tank capacity 50 litres

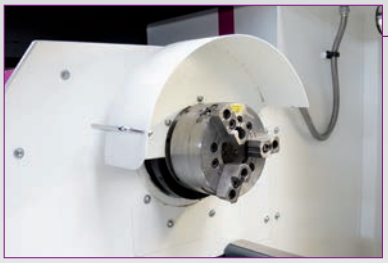

Three-jaw chuck
- Hydraulic three-jaw lathe chuck Ø 150 mm
- Easy workpiece clamping

Automatic lubrication system
- Folds out for easy filling
- Float switch measures the oil quantity. If the oil level is too low, an acoustic signal is output, thus preventing machine damage

SPECIAL EQUIPMENT

6 Power transformer

4 Bar feeder

5 Portable electronic handwheel

1 Steady rests

2 Hydraulic tailstock

3 SWH and tool turret

1	351433002	**Fixed steady**	· Passage Ø 10 mm to Ø 130 mm
	351433003	**Travelling steady**	· Passage Ø 10 mm to Ø 100 mm
2	351433001	**Hydraulic tailstock quill**	· for fast machining · Quill can be extended and retracted hydraulically
3	351433011	**Fast change tool holder** Multifix 4	· instead of standard equipment > hydraulic tool turret VDI30
4	351433012	**Bar feeder Pro V 65 E** 1.2 metres	· "Pro V 65 E / Pro V 65 LE" on page 86
	351433019	**Bar feeder Pro V 65 LE** 3.2 metres	· "Pro V 65 E / Pro V 65 LE" on page 86
NEW	351433026	**Bar feeder Interface**	
5	351433009	**Portable electronic handwheel**	· Instead of standard equipment > joystick
6	351433013	**Power transformer**	· for custom voltage · Weight 147 kg
NEW	9001051	**Software DXF-Viewer/Reader**	· from Version 4,7

"Lathe chucks and jaws" on page 86

Special equipment can only be ordered ex works. Contact your dealer for pricing and further options, or mail us on:
info@optimum-maschinen.de

OPTIturn® L 440 / L 460

PREMIUM line

The OPTIMUM PREMIUM high performance CNC cycle lathe. Powerful performance. More speed. Maximum precision

- High-precision machine with the latest SIEMENS control and SIEMENS servodrives
- Compact spindle stock design
- High-speed spindle 4,500 rpm with high-precision and generously dimensioned taper roller bearings
- Shifting between the two gears occurs pneumatically via a compressed air cylinder
- Spindle stock design guarantees minimal noise development
- Wide machine bed with double-square guide rails, also for roughing work
- Bed rails tempered and polished
- Generously dimensioned tailstock, easily positionable with quick clamping mechanism
- Two separately movable sliding doors with integrated view windows at front
- Microswitch prevents starting the machine if the door is not fully closed
- RJ45 plug-in connection, USB connection and power connection 230 V
- Mobile control panel
- Two electronic hand wheels for manual control of the X and Z axis
- Automatic spindle stock lubrication
- Automatic lubrication of longitudinal and transverse slides
- Halogen work lamp
- Closed switch cabinet with integrated heat exchanger ensures an optimal temperature even in case of high ambient temperatures, and prevents dirt particle penetration
- Two-year SIEMENS warranty included
- "Warranty extension" on page 108

INCLUDING

Safety Integrated
Residual material detection and machining
Shopturn work step programming
3-D simulation
Network preparation
Simultaneous recording

SIEMENS control

Sinumerik 828 D Basic T

Information "SINUMERIK 828 D BASIC T" on page 108

Siemens SAFETY INTEGRATED
Set up work with open doors

Fig. L 460

The CNC-machine complies with standard DIN EN 55011: class C1 (Use only in industrial areas)

Model	L 440	L 460
Article no.	3514410	3514420
Machine data		
Electrical connection	400 V / 3 Ph ~50 Hz	400 V / 3 Ph ~50 Hz
Total connected load	25 KVA	25 KVA
Spindle		
Drive motor	11 kW (S1 operation 9 kW)	11 kW (S1 operation 9 kW)
Drive motor torque	70 Nm	70 Nm
Spindle holder	DIN ISO 702-1 Nr. 6	DIN ISO 702-1 Nr. 6
Spindle hole	Ø 65 mm*	Ø 65 mm
Cooling lubricant system		
Coolant pump output	375 W	375 W
Tank capacity without chip conveyor	170 litres	240 litres
Hydraulic system		
Motor output	750 W	750 W
Tank capacity	50 litres	50 litres
Machine data		
Max. height	235 mm	235 mm
Turning length max.	1,000 mm	1,500 mm
Swing over cross slide	240 mm	240 mm
Swing diameter over machine bed	475 mm	475 mm
Swing in the bed bridge	710 mm	710 mm
Hydraulic lathe chuck	Ø 200 mm	Ø 200 mm
Chuck passage	Ø 52 mm	Ø 52 mm
Speed range		
Spindle speed stage 1/stage 2	100 - 950 rpm / 900 - 4,500 rpm	100 - 950 rpm / 900 - 4,500 rpm
Torque stage 1/stage 2	525 Nm / 382 Nm	525 Nm / 382 Nm
Tool turret		
Hydraulic type	LS 160 VDI 40	LS 160 VDI 40
Number of tool slots	8	8
Max. chuck height, width square	25 x 25 mm	25 x 25 mm
Max. chuck diameter drilling rod	Ø 32 mm	Ø 32 mm
Optional C axis		
Motor	5 kW	5 kW
Motor torque	15 Nm	15 Nm
Spindle speeds	6,000 rpm	6,000 rpm
Precision		
Repetition accuracy	± 0,005 mm	± 0,005 mm
Positioning accuracy	± 0,005 mm	± 0,005 mm
Travel		
X axis	260 mm	260 mm
Z axis	1,150 mm	1,680 mm
Feed speed		
X axis	15,000 mm/min	15,000 mm/min
Z axis	15,000 mm/min	15,000 mm/min
Motor torque		
X axis	6 Nm	6 Nm
Z axis	16 Nm	16 Nm
Tailstock		
Tailstock chuck	MK 4	MK 4
Tailstock quill diameter/stroke	65 mm / 150 mm	65 mm / 150 mm
Dimensions		
Length x width x height	3,030 x 1,952 x 2,025 mm	3,530 x 1,952 x 2,025 mm
Overall weight	3,000 kg	3,450 kg

* depending on installed lathe chuck

Serial equipment
· EMC
· Portable electronic handwheel
· Hydraulic tool turret LS160 VDI40
· Hydraulic three-jaw lathe chuck Ø 200 mm
· Hard and soft block jaws
· Heat exchanger
· Tailstock end cover
· Six machine feet
· Coolant system

Starter set	VDI 40
Article no.	3536116

"Lathe chucks and jaws" on page 86

Information "Starter set VDI 40" on page 117

INFORMATION

Lifting device 3514301

· A lifting device is required to unload the machine.

OPTI turn® L 440 / L 460

STANDARD EQUIPMENT

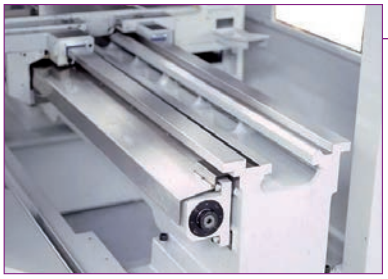

Machine bed

- Particularly wide design
- Ball screw drive for excellent repetition accuracy

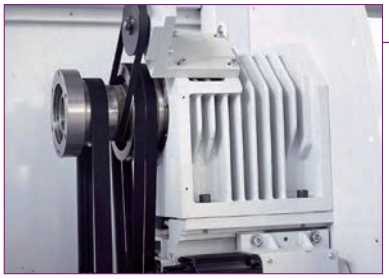

Spindle stock

- Precision borne
- Rugged design
- Smooth action even at high spindle speeds

Heat exchanger

- Closed switch cabinet with smart cooling management ensures an optimal temperature even in case of high ambient tempera-tures
- Prevents dirt particles entering

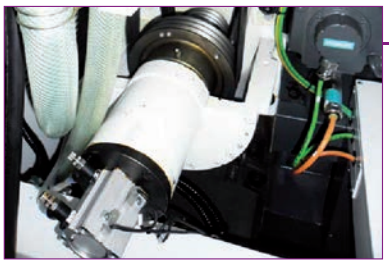

Speed changer

- Pneumatic
- Automatic
- The shaft runs in sintered bronze thus guaranteeing excellent precision

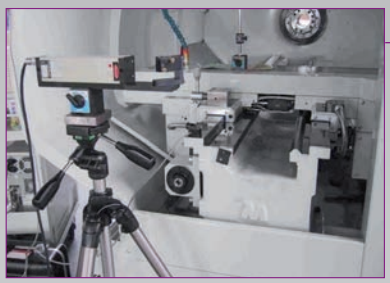

Laser measuring

- Guaranteed repetition and positioning accuracy

Tool turret

- 8 tool slots
- Hydraulic VDI 40
- Max. chuck height 25 mm
- Max. chuck diameter 32 mm

Tailstock

- Generously dimensioned
- Slide with ball screw and pre-stressed nut

Hydraulic power unit

- For clamping jaws, lathe chuck and tool turret
- Motor output 750 W
- Tank capacity 50 litres
- Clamping pressure/operating pressure 2,500 - 2,942 kPa

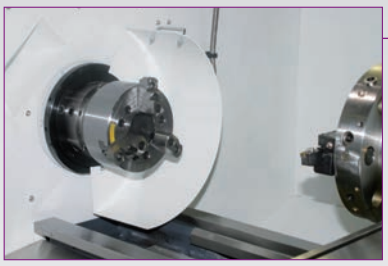

Lathe chuck

- Three-jaw lathe chuck hydraulic Ø 200 mm
- Passageway Ø 52 mm
- Easy workpiece clamping

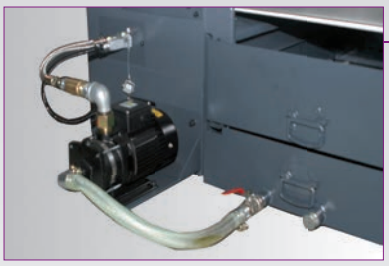

Coolant system

- Powerful 375 W pump
- Max. delivery rate 55 l/min.
- Max. pump pressure 235 kPa

SPECIAL EQUIPMENT

1 Internal tool cooling

2 Steady rests

3 Tool holder, tool turret, C axis brake system

4 Tailstock options

5 Various bar feeders

7 Air conditioner

8 Coolant pump
Oil separator

9 Chip conveyor and trolley

6 Joystick
Portable electronic handwheel

	L440	L460		
1	351441001	351442001	**Internal tool cooling CTS** 20 bar	· With external power unit
2	351441003	351442003	**Fixed steady**	· Passageway Ø 20 - Ø 200 mm
	351441004	351442004	**Travelling steady**	· Passageway Ø 20 - Ø 100 mm
3	351441016	351442016	**Tool holder set**	· instead of standard equipment > hydraulic tool turret LS160 · - Only for standard changer, not VDI -
	351441012	351442012	**Tool turret Baruffaldi TBMA160 VDI40**	· 8 tool slots · Tool drive · hydraulic · instead of standard equipment > tool turret LS160 VDI40
	351441017	351442017	**C axis brake system**	· only with tool turret Baruffaldi TBMA 160 VDI40 (3514410 12/351442012)
4	351441021	351442021	**Hydraulic tailstock spindle**	
	351441019	351442019	**Machine preparation**	Hydraulic tailstock spindle
	351441023	351442023	**Pneumatic lifting device** for the tailstock	· Pneumatic air cushion, reduces friction thus facilitating tailstock movement
	351441022	351442022	**Device** for **travelling** tailstock	· Tailstock and support are linked for motion
5	351441033	351442033	**Bar feeder Pro V 65 E** 1.2 metres	· "Pro V 65 E / Pro V 65 LE" on page 86
	351441035	351442035	**Bar feeder Fedek DH-65** 1.2 metres	· "FEDEK DH-65 / DH-65 L" on page 86
	351441034	351442034	**Bar feeder Pro V 65 LE** 1.5 metres	· "Pro V 65 E / Pro V 65 LE" on page 86
	351441036	351442036	**Bar feeder Fedek DH-65L** 1.5 metres	· "FEDEK DH-65 / DH-65 L" on page 86
	351441037	351442037	**Bar feeder Interface**	
NEW 6	351441020	351442020	**Portable electronic handwheel**	· Instead of standard equipment > electronic handwheel (cannot be combined with joystick 3514410 02 / 351442002)
	351441002	351442002	**Joystick**	· for moving the X and Z axis (cannot be combined with electronic handwheel 351441(2)0 20)
7	351441014	351442014	**Air conditioner**	· Instead of standard equipment > heat exchanger
8	351441007	351442007	**Oil separator**	· with rotating disc, removes oil from the coolant, capacity: 1 litre per hour
	351441013	351442013	**Coolant pump**	· 5 bar
9	351441005	351442005	**Chip conveyor**	· L 440: 1.0 meters - L 460: 1.5 meters
	351441006	351441006	**Chip trolley**	· wheels, foldable, L x W x H: 994 x 510 x 838 mm
NEW	9001051		**Software DXF-Viewer/Reader**	· from Version 4,7

Special equipment can only be ordered ex works. Contact your dealer for pricing and further options, or mail us on:
info@optimum-maschinen.de

OPTIturn® L 500 / L 520

PREMIUM line

OPTIMUM PREMIUM High performance CNC cycle lathe with the latest SIEMENS control

- High precision machine with SIEMENS servodrives
- New compact spindle stock design
- High-speed spindle 3,500 rpm with high-precision and generously dimensioned taper roller bearings
- Shifting between the two gears occurs pneumatically via a compressed air cylinder
- Spindle stock design guarantees minimal noise development
- Rugged ball screw spindle Ø 45 mm for longitudinal movement
- Tempered and precision ground, high-precision bearing mounted ball screw spindle on X and Z axis for ultra-precision translation
- Bed rails tempered and polished
- Generously dimensioned tailstock, easily positionable with quick clamping mechanism
- Two separately movable sliding doors with integrated view windows
- Microswitch prevents starting the machine if the door is not fully closed
- RJ45 plug-in connection, USB connection and power connection 230 V
- Mobile control panel
- Two electronic hand wheels for manual control for the X and Z axis
- Automatic spindle stock lubrication
- Automatic lubrication of longitudinal and transverse slides
- Swarf conveyor
- Chip carriage
- Halogen work lamp
- Two-year SIEMENS warranty included
- "Warranty extension" on page 108

INCLUDING

Safety Integrated
Residual material detection and machining
Shopturn work step programming
3-D simulation
Network preparation
Simultaneous recording

SIEMENS control

Sinumerik 828 D Basic T

"SINUMERIK 828 D BASIC T" on page 108

Siemens SAFETY INTEGRATED
Set up work with open doors

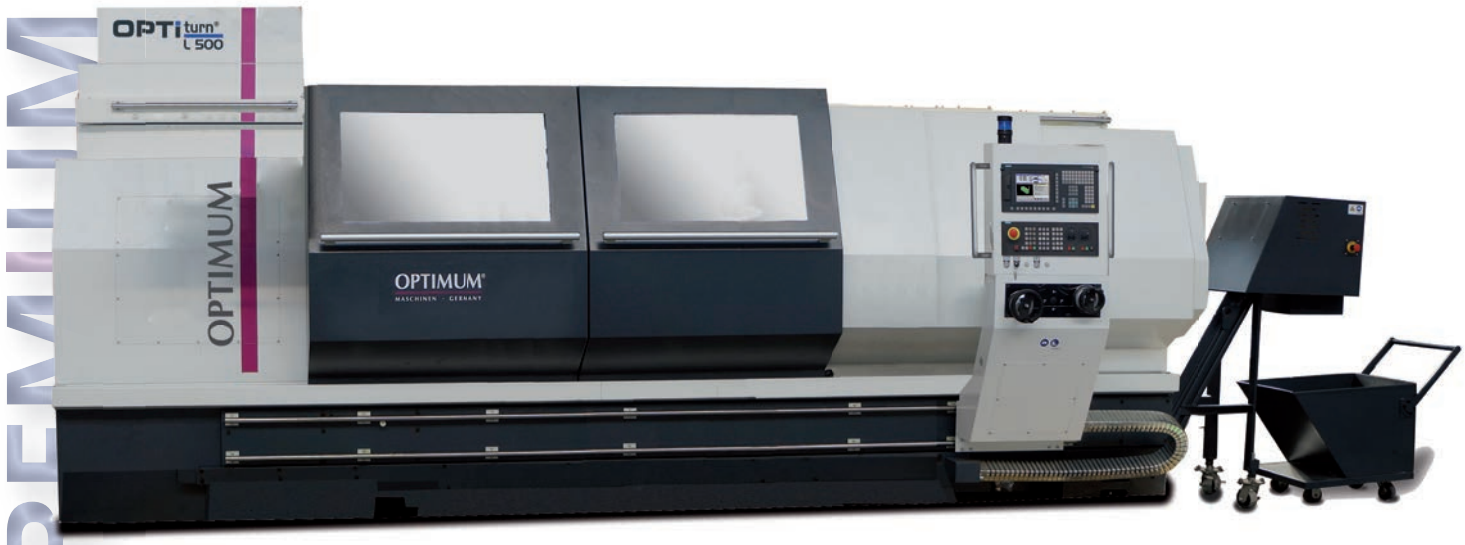

Fig. L 500

Starter set	VDI 40
Article no.	3536116

"Starter set VDI 40" on page 117

INFORMATION

Lifting device 3514302
- For unloading the machine

Serial equipment	
· EMC	· Tailstock detent
· Portable electronic handwheel	· 6 machine feet
· Hydraulic tool turret LS160 VDI40	· Coolant system
· Hydraulic three-jaw lathe chuck Ø 250 mm	· Heat exchanger
· Hard and soft block jaws	· Swarf conveyor
· Tailstock end cover	· Chip carriage

The CNC-machine complies with standard DIN EN 55011: class C1 (Use only in industrial areas)

Model	L 500	L 520
Article no.	3514430	3514440
Machine data		
Electrical connection	400 V / 3 Ph ~50 Hz	400 V / 3 Ph ~50 Hz
Total connected load	25 KVA	37,5 KVA
Spindle		
Drive motor	12 kW S1	15 kW S1
Drive motor torque	115 Nm	115 Nm
Spindle holder	DIN ISO 702-1 Nr. 8	DIN ISO 702-1 Nr. 8
Spindle hole	Ø 82 mm*	Ø 82 mm*
Cooling lubricant system		
Coolant pump output	450 W	450 W
Tank capacity	208 litres	260 litres
Hydraulic system		
Motor output	750 W	750 W
Tank capacity	50 litres	50 litres
Machine data		
Max. height	235 mm	235 mm
Max. turning length with tool turret	2,000 mm	3,000 mm
Swing over cross slide	310 mm	310 mm
Swing diameter over machine bed	550 mm	550 mm
Swing in the bed bridge	790 mm	790 mm
Max. workpiece weight with tailstock	2,000 kg	2,000 kg
Bed width	405 mm	405 mm
Hydraulic lathe chuck	Ø 250 mm	Ø 250 mm
Chuck passage	Ø 70 mm	Ø 70 mm
Speed range		
Spindle speed stage 1/stage 2	80 - 950 rpm / 900 - 3,500 rpm	80 - 950 rpm / 900 - 3,500 rpm
Torque stage 1/stage 2	955 Nm / 409 Nm	1.055 Nm / 535 Nm
Optional speed range		
Spindle speed stage 1/stage 2	80 - 950 rpm / 900 - 2,400 rpm	80 - 950 rpm / 900 - 2,400 rpm
Torque stage 1/stage 2	1.616 Nm / 754 Nm	1.791 Nm / 835 Nm
Tool turret		
Hydraulic type	LS 160 VDI 40	LS 160 VDI 40
Number of tool slots	12	12
Max. chuck height, width square	25 x 25 mm	25 x 25 mm
Max. chuck diameter drilling rod	Ø 32 mm	Ø 32 mm
Precision		
Repetition accuracy	± 0,005 mm	± 0,005 mm
Positioning accuracy	± 0,005 mm	± 0,005 mm
Travel		
X axis	345 mm	345 mm
Z axis	2,150 mm	3,150 mm
Feed speed		
X axis	15,000 mm/min	15,000 mm/min
Z axis	15,000 mm/min	15,000 mm/min
Motor torque		
X axis	11 Nm	11 Nm
Z axis	20 Nm	20 Nm
Tailstock		
Tailstock chuck	MK 5	MK 5
Tailstock quill diameter	80 mm	80 mm
Tailstock quill stroke	150 mm	150 mm
Dimensions		
Length with/without chip conveyor x w x h	4.190 / 5.337 x 2.262 x 2.050 mm	5.190 / 6.337 x 2.262 x 2.050 mm
Overall weight	5,170 kg	6,200 kg

Dimensions

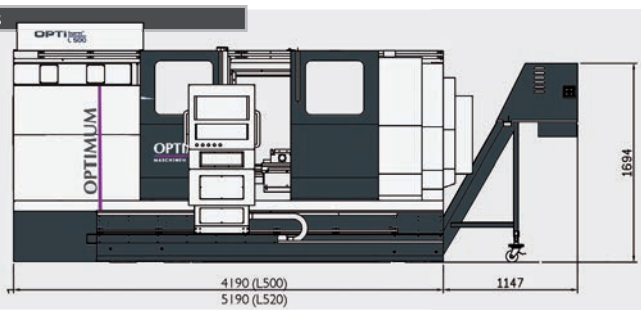

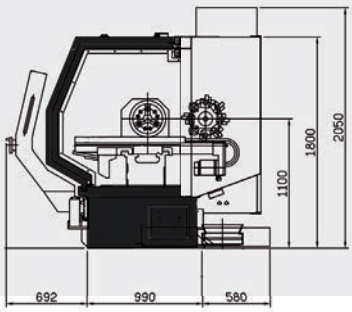

* depending on installed lathe chuck

OPTIturn® L 500 / L 520

STANDARD EQUIPMENT

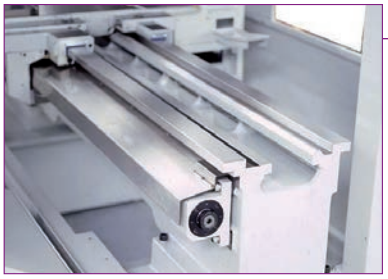

Machine bed

- Particularly wide design
- Higher fast motion
- Ball screw drive for excellent repetition accuracy

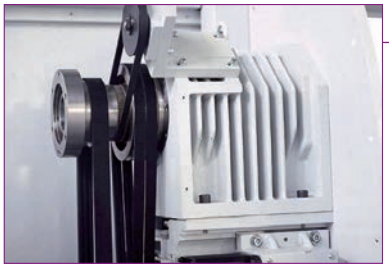

Spindle stock

- Pneumatic, automatic speed changer
- Fully automatic mode
- Shaft on manual transmission made of sintered bronze for high precision

Heat exchanger

- Closed switch cabinet with smart cooling management ensures an optimal temperature even in case of high ambient temperatures
- Prevents dirt particles entering

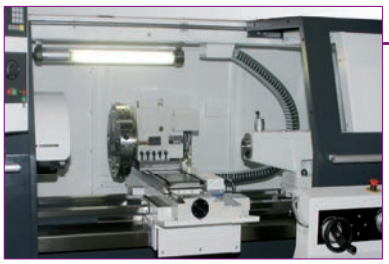

Machine bed

- Full Z axis stroke (the actual rotation capacity of the Z axis on other competitor machines on the market is 10-20% less)

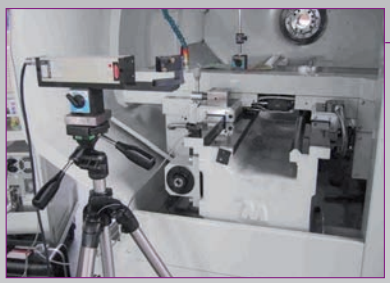

Laser measuring

- Guaranteed repetition and positioning accuracy

Tool turret

- Eight tool slots
- Hydraulic VDI 40
- Max. chuck height 25 mm
- Max. chuck diameter 32 mm

Chip trolley/conveyor

- Chip conveyor makes work easier and saves time
- The chip trolley is rollable and folding

Chip cleaning

- A slanted shape along the bed allows the chips to drop directly into the chip tray
- Slanted design of the door prevents the chips accumulating on the door

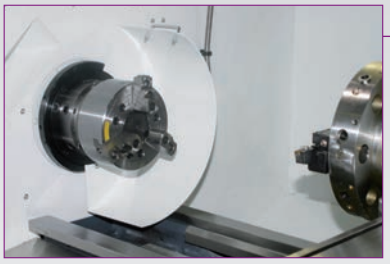

Lathe chuck

- Three-jaw lathe chuck hydraulic Ø 250 mm
- Passageway 69 mm
- Easy workpiece clamping

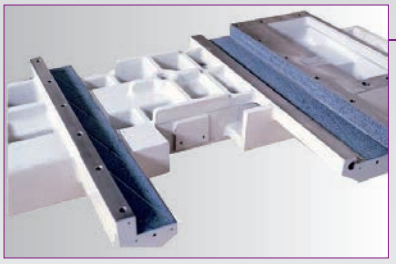

Guide bearing

- Coated
- Hand shaven for highest precision

Special equipment can only be ordered ex works. Contact your dealer for pricing and further options, or mail us on: info@optimum-maschinen.de

SPECIAL EQUIPMENT

1 Internal tool cooling

2 Steady rests

3 Tool turret, C axis brake system

4 Tailstock options

5 Various bar feeders

6 Joystick Portable electronic handwheel

7 Air conditioner

8 Coolant pump Oil separator

9 Drive motor

	L500	L520		
1	351443001	351444001	**Internal tool cooling CTS** 20 bar	· External power unit (we recommend an extraction)
2	351443003	351444003	**Fixed steady**	· Passage Ø 20 mm to Ø 200 mm
	351443014	351444013	**Fixed steady**	· Passage Ø 150 mm to Ø 330 mm
	351443015	351444014	**Fixed steady**	· Passage Ø 180 mm to Ø 410 mm
	351443004	351444004	**Travelling steady**	· Passage Ø 20 mm to Ø 200 mm
3	351443011	351444010	**Tool turret Baruffaldi TBMA160 VDI40**	· Eight tool slots, Tool drive, hydraulic · instead of standard equipment > tool turret LS160 VDI40
	351443012	351444011	**C axis brake system**	· only with tool turret Baruffaldi TBMA 160 VDI40 (351443011 / 351444010)
4	351443018	351444017	**Hydraulic tailstock spindle**	
	351443016	351444015	**Machine preparation** for hydraulic tailstock spindle	
	351443019	351444018	**Larger tailstock quill**	· Quill diameter 100 mm (standard Ø 80 mm)
5	351443031	351444031	**Bar feeder Pro V 65 E** 1.2 metres	· "Pro V 65 E / Pro V 65 LE" on page 86
	351443032	351444032	**Bar feeder Fedek DH-65** 1.2 metres	· "FEDEK DH-65 / DH-65 L" on page 86
	351433033	351434033	**Bar feeder Pro V 65 LE** 1.5 metres	· "Pro V 65 E / Pro V 65 LE" on page 86
	351433034	351434034	**Bar feeder Fedek DH-65L** 1.5 metres	· "FEDEK DH-65 / DH-65 L" on page 86
	351443035	351444035	**Bar feeder interface**	
6	351443017	351444016	**Portable electronic handwheel**	· Instead of standard equipment > electronic handwheel (cannot be combined with joystick 351443(4)0 02)
	351443002	351444002	**Joystick**	· for moving the X and Z axis (cannot be combined with portable electronic handwheel 351443017/ 351444016)
7	351443027	351444025	**Air conditioner**	· Instead of standard equipment > heat exchanger
8	351443022	351444020	**Oil separator**	· With rotary disc · removes oil from the coolant · Capacity: 1 litre per hour
	351443021	351444028	**High performance coolant pump**	· 5 bar
	9001051		**Software DXF-Viewer/Reader**	· from Version 4,7
9	351443010	351444009	**Drive motor 15 kw (S1)**	· Instead of standard equipment > drive motor 12 kW (S1)

"Lathe chucks and jaws" on page 86

Special equipment can only be ordered ex works. Contact your dealer for pricing and further options, or mail us on: info@optimum-maschinen.de

OPTIturn® S 400E

NEW

CNC sloping bed lathe for speed, performance, precision and a long service life

- Compact design
- Sloping bed design 45° for particularly large machining diameter
- Easy chip removal into the chip tray
- Dimensionally stable linear guides ensure a long service life for maximum static and dynamic stiffness
- Hardened and polished ball screw spindles
- All servomotors with integrated encoder for maximum precision
- Renishaw measuring arm for manual tool measuring
- Tailstock with hydraulic quill
- Portable electronic handwheel substantially facilitates running in of programs
- Swarf conveyor
- Chip carriage
- Halogen work lamp
- Software package "SINUMERIK 808D on PC" included. (Practical training software allowing workpieces to be programmed and simulated on a PC offline. Download for free on www.cnc4you.com)
- Two-year SIEMENS warranty included

SIEMENS control

SINUMERIK 808D
SINUMERIK 808D Advanced

Information "SINUMERIK 808D" on page 104 and "SINUMERIK 808D ADVANCED" on page 106

Benefits: SINUMERIK 808D ADVANCED
- Closed-loop control circuit
- RJ-45 connection
- Prepared for remote maintenance
- AST function gives users an easy optimisation option in case of stricter dynamic and precision requirements
- Absolute encoder
- Greater precision

The CNC-machine complies with standard DIN EN 55011: class C1 (Use only in industrial areas)

Model	S 400E
Article no. SINUMERIK 808D	3504320
Article no. SINUMERIK 808D Advanced	3504325
Machine data	
Electrical connection	400 V 3 Ph ~50Hz
Total connected load	19 KVA
Spindle	
Drive motor	7.5 kW
Main spindle torque	95.6 Nm
Spindle holder	A 2-6
Spindle hole	Ø 61 mm*
Cooling lubricant system	
Coolant pump output	450 W
Tank capacity	75 litres
Hydraulic system	
Motor output	1.5 kW
Tank capacity	60 litres
Machine data	
Turning length (max.)	430 mm
Turning Ø max.	400 mm
Swing over cross slide	200 mm
Swing diameter over machine bed	450 mm
Angled bed	45^0
Hydraulic lathe chuck	Ø 200 mm
Chuck passage	Ø 52 mm
Speed range	
Spindle speeds	40 - 4,500 rpm
Tool turret	
Type	hydraulic
Number of tool slots	8
Max. chuck height, width square	25 mm
Max. chuck diameter drilling rod	16 mm
Precision	
Repetition accuracy	0.01 mm
Positioning accuracy	0.01 mm
Travel	
X axis	200 mm
Z axis	430 mm
Feed speed	
X/Z axis	10,000 mm/min.
Motor torque	
X/Z axis	10 Nm
Tailstock	
Tailstock chuck	MK 4
Tailstock quill diameter	Ø 72 mm
Tailstock - quill stroke hydraulic	110 mm
Dimensions	
L with/without chip conveyor x W x H	3,670 (2,535) x 1,875 x 2,155 mm
Overall weight	3,500 kg

* depending on clamping equipment used

Dimensions

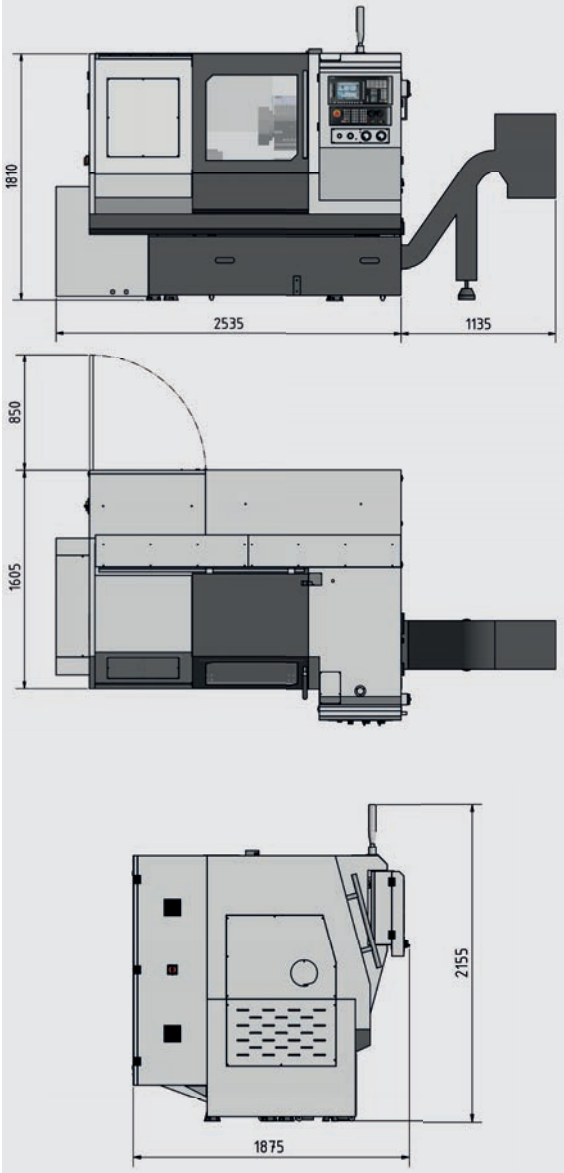

Serial equipment
· Swarf conveyor
· Electric handwheel
· Hydraulic 3-jaw lathe chuck Ø 200 mm
· Operating tool
· Renishaw tool measuring
· Machine feet
· Chip carriage

"CNC introductory training" on page 100

- We urgently recommend initial training by our qualified staff.

OPTIturn® S 600

PREMiUM line

OPTIMUM PREMiUM CNC sloping bed lathe for speed, performance precision and a long service life

- Heavy duty version
- Compact design
- Sloping bed design 30° for particularly large machining diameter
- Easy chip removal into the chip tray
- Dimensionally stable linear guides ensure a long service life for maximum static and dynamic stiffness
- Hardened and polished ball screw spindles
- SIEMENS servomotors for the spindles and the X and Z axis
- All servomotors with integrated encoder for maximum precision
- Device for manual tool measuring
- Tailstock with hydraulic quill
- Portable electronic handwheel substantially facilitates running in of programs
- Swarf conveyor
- Chip carriage
- Halogen work lamp
- Two-year SIEMENS warranty included
- "Warranty extension" on page 108

INCLUDING

Safety Integrated
Residual material detection and machining
Shopturn work step programming
3-D simulation
Network preparation
Simultaneous recording

SIEMENS control

Sinumerik 828 D Basic T

Information "SINUMERIK 828 D BASIC T" on page 108

SIEMENS SAFETY INTEGRATED
Set up work with open doors

PREMIUM

Fig. S 600

The CNC-machine complies with standard DIN EN 55011: class C1 (Use only in industrial areas)

Model	S 600
Article no.	3515060
Machine data	
Electrical connection	400 V / 3 Ph ~50 Hz
Total connected load	31 KVA
Spindle	
Drive motor	12 kW
Drive motor torque	115 Nm
Spindle holder	DIN ISO 702-1 No. 6
Spindle hole	Ø 75 mm**
Cooling lubricant system	
Coolant pump output	750 W
Cleaning pump output	750 W
Tank capacity	140 litres
Hydraulic system	
Motor output	1.5 kW
Tank capacity	60 litres
Machine data	
Turning length (max.)	460 mm
Turning Ø max.	500 mm
Swing over cross slide	210 mm
Swing diameter over machine bed	500 mm
Angled bed	30^0
Hydraulic lathe chuck	Ø 215 mm
Chuck passage	Ø 65 mm*
Speed range	
Spindle speeds	10 - 4.000 rpm**
Tool turret	
Hydraulic type	LS 200
Number of tool slots	12
Max. chuck height, width square	25 x 25 mm
Max. chuck diameter drilling rod	Ø 32 mm
Precision	
Repetition accuracy	± 0,005 mm
Positioning accuracy	± 0,005 mm
Travel	
X axis	215 mm
Z axis	520 mm
Feed speed	
X/Z axis	30,000 mm/min
Motor torque	
X/Z axis	11 Nm
Tailstock	
Tailstock chuck	MK 4
Travel	425 mm
Tailstock quill diameter	65 mm
Tailstock - quill stroke hydraulic	50 mm
Dimensions	
Length x width x height	2,322 x 1,948 x 1,930 mm
Overall weight	3,070 kg

* depending on installed lathe chuck
** other spindle holes and spindle speeds on request

Serial equipment	
· Renishaw tool measuring	· Tool holder for MK3
· EMC	· Coolant system
· Portable electronic handwheel	· Heat exchanger
· Hydraulic tool turret LS200 Standard	· Swarf conveyor
· Hydraulic three-jaw lathe chuck Ø 200 mm	· Chip carriage
· Hard and soft block jaws	· Operating tool
· Tool holder set: three holders for reduction sleeves, one holder for an outside lathe tool and five reduction sleeves Ø 12 mm, Ø 16 mm, Ø 20 mm, Ø 25 mm, MK 3	

Dimensions

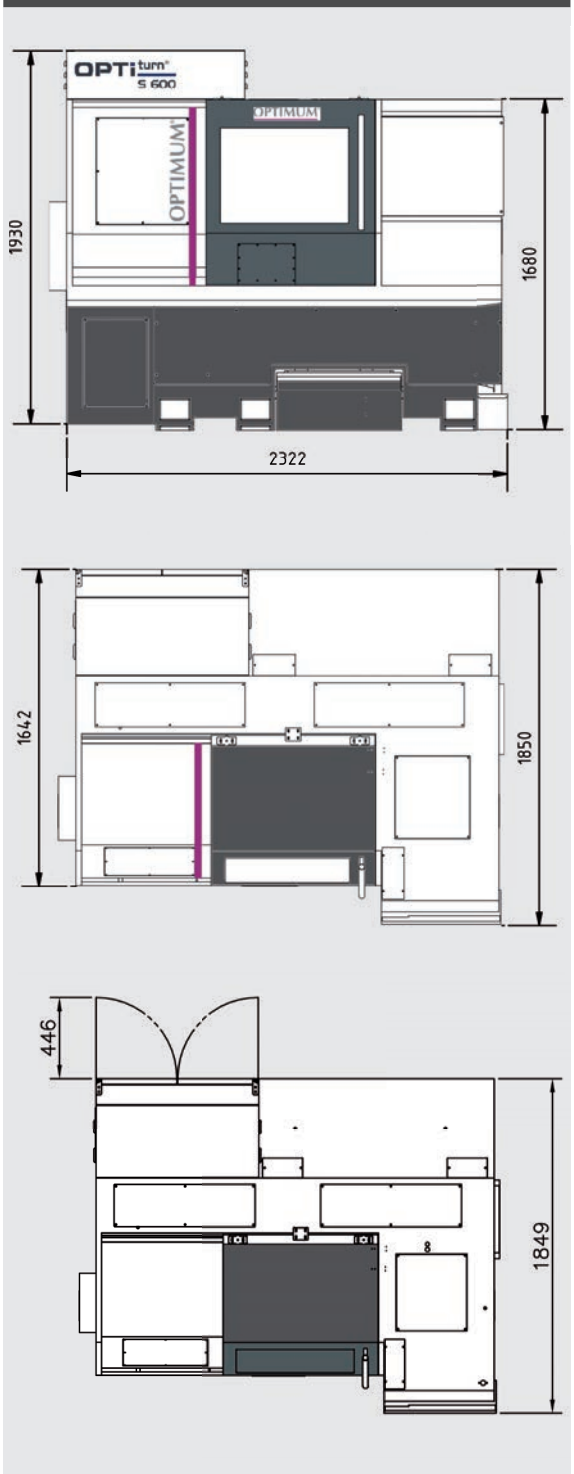

"CNC introductory training" on page 100

- We urgently recommend initial training by our qualified staff.

OPTIturn® S 600

STANDARD EQUIPMENT

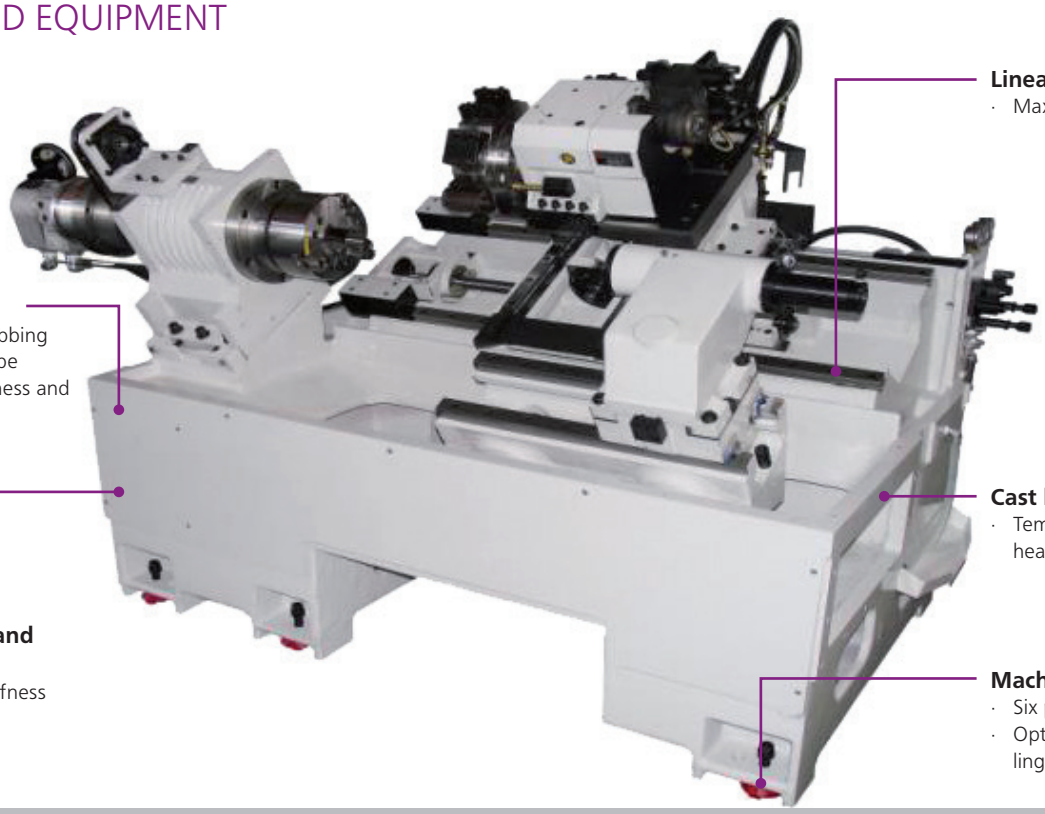

Linear guide
- Maximum feed speed

Machine bed
- Pronounced ribbing
- 30-degree slope
- Excellent stiffness and durability

Cast body
- Tempered HRC48-52 and heat-treated

Components and cast parts
- Guarantee stiffness

Machine feet
- Six pcs.
- Optimal machine levelling

Tailstock quill
- Hydraulic quill stroke 50 mm
- Faster machining

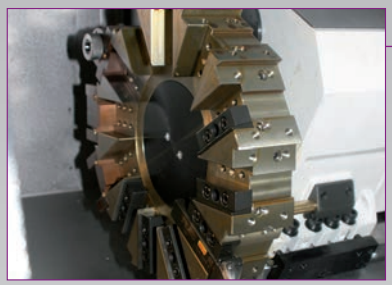

Tool turret
- Twelve tool slots
- Hydraulic (LS 200)
- Max. chuck height 25 mm
- Max. chuck diameter 32 mm

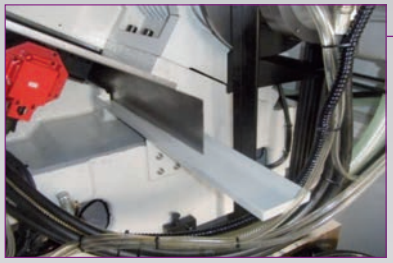

Coolant and lubricant trap
- Separates lubricant from coolant

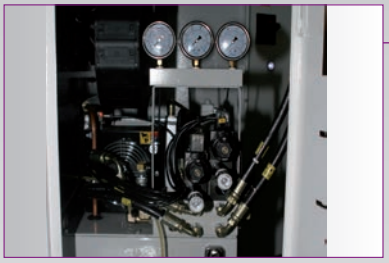

Hydraulic power unit
- For clamping jaws, lathe chuck, tool turret and tailstock quill
- Safety non-return valve
- Motor output 1.5 kW
- Tank capacity 60 litres

Tool measuring
- Renishaw
- Allows tools to be measured inside the machine

Automatic lubrication system
- Folds out for easy filling
- Float switch measures the oil quantity. If the oil level is too low, an acoustic signal is output, thus preventing machine damage

SPECIAL EQUIPMENT

5 Various bar feeders

10 Automatic door opening

8 Air conditioner

9 Automatic part gripper

7 Coolant pump Oil separator

1 Internal tool cooling

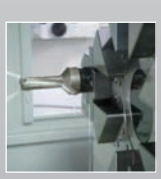

2 Tool turret

3 Tailstock options

4 Spring collets and chucks

6 Automatic tool measuring

1	351506019	**Internal tool cooling** 20 bar	· With external coolant tank
2	351506003	**Tool turret VDI 30 - 40** Without driven tools	· VDI 30 - twelve tools · VDI 40 - eight tools · Instead of standard equipment > tool turret LS-200
	351506001	**Sauter tool turret VDI 30** Driven tools	· Twelve driven tools · C axis brake system · Instead of standard equipment > tool turret LS-200
3	351506004	**Automatic tailstock motion**	· via M Code
	351506005	**Machine preparation** for automatic tailstock motion	· Only in combination with automatic tailstock motion (351506004)
4	351506012	**Bar feeder Pro V 65 E** 1.2 metres	· "Pro V 65 E / Pro V 65 LE" on page 86
	351506014	**Bar feeder Fedek DH-65** 1.2 metres	· "FEDEK DH-65 / DH-65 L" on page 86
	351506013	**Bar feeder Pro V 65 LE** 1.50 metres	· "Pro V 65 E / Pro V 65 LE" on page 86
	351506015	**Bar feeder Fedek DH-65L** 1.5 metres	· "FEDEK DH-65 / DH-65 L" on page 86
	351506023	**Bar feeder Pro V 65 LE** 3.2 metres	· "Pro V 65 E / Pro V 65 LE" on page 86
	351506011	**Bar feeder interface**	
5	351506017	**Spring collet individual**	· from Ø 10 mm to Ø 14.9 mm
	351506018	**Spring collet individual**	· from Ø 15 mm to Ø 60 mm
	351506002	**Collet chuck**	· for spring collets from Ø 15 mm to Ø 60 mm
6	351506006	**Automatic tool measuring**	· Instead of standard equipment > Manual tool measuring
7	351506020	**Oil separator**	· With rotary disc, removes oil from the coolant · Capacity: 1 litre per hour
	351506022	**High performance coolant pump**	· 5 bar
8	351506021	**Air conditioner**	· Instead of standard equipment > heat exchanger
9	351506007	**Automatic part gripper**	
10	351506016	**Automatic door opening**	
	9001051	**Software DXF-Viewer/Reader**	· from Version 4,7

"Lathe chucks and jaws" on page 86

Special equipment can only be ordered ex works. Contact your dealer for pricing and further options, or mail us on:
info@optimum-maschinen.de

OPTIturn® S 500 / S 750

PREMiUM line

The OPTIMUM PREMiUM CNC lathe impresses with high speeds, precision and efficiency and with additional equipment such as chip conveyors and a C axis

- Rugged and heavy "cartridge" spindle system with one two-row cylinder roller bearing each at the front and back, and a double-side taper bearing in the centre
- Long service life of all bearings thanks to permanent lubrication
- All axes with SIEMENS servomotors
- All axes directly driven to eliminate torsion backlash or for greater precision in thread tapping and contour machining
- Doubly pre-stressed ball screw spindles with low helix slope to increase feed force
- Fast turret head switching - releasing and rotation occur practically at the same time
- Turret head switching occurs non-stop bi-directionally
- Tailstock quill is activated with the pedal or in the program
- Tailstock body positioned with a drive rod which moves in with the slide
- Clamping and releasing of the drive rod are programmable
- Portable electronic handwheel
- Preparation for bar feeder
- Hydraulic tool turret by Sauter with driven tools
- Automatic door opening with monitoring
- Chip conveyor and chip trolley
- Automatic Renishaw measuring arm for measuring tools
- Part grippers
- Two-year SIEMENS warranty included
- "Warranty extension" on page 110

INCLUDING

Safety Integrated
Residual material detection and machining
Shopturn work step programming
3-D simulation
Network preparation
Simultaneous recording

SIEMENS control
SINUMERIK 828D

"SINUMERIK 828D" on page 110

SIEMENS SAFETY INTEGRATED
Set up work with open doors

Fig. S 500

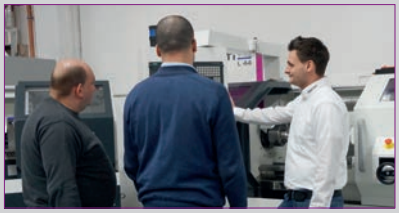

- We urgently recommend initial training by our qualified staff.

"CNC introductory training" on page 100

The CNC-machine complies with standard DIN EN 55011: class C1 (Use only in industrial areas)

Model	S 500	S 750
Article no.	3515150	3515170
Machine data		
Electrical connection	400 V / 3 Ph ~50 Hz	400 V / 3 Ph ~50 Hz
Total connected load	50 KVA	62,5 KVA
Spindle		
Drive motor	17 kW	30 kW
Drive motor torque	162 Nm	186 Nm
Spindle holder	DIN ISO 702-1 Nr. 6	DIN ISO 702-1 Nr. 8
Spindle hole	Ø 66 mm*	Ø 88 mm*
Cooling lubricant system		
Coolant pump output	750 W	750 W
Tank capacity	185 litres	185 litres
Hydraulic system		
Motor output	1.5 kW	1.5 kW
Tank capacity	70 litres	70 litres
Machine data		
Max. height	600 mm	600 mm
Max. turning length* with tool turret	750 mm	1,250 mm
Swing over cross slide	450 mm	450 mm
Swing diameter over machine bed	600 mm	600 mm
Max. turning diameter	485 mm	485 mm
Angled bed	45^0	45^0
Hydraulic lathe chuck	Ø 200 mm	Ø 250 mm
Chuck passage	Ø 52 mm	Ø 77 mm
Speed range		
Spindle speeds	10 - 4.000 rpm	10 - 3,000 rpm
Tool turret		
Hydraulic type	Sauter VDI40 with tool drive	Sauter VDI40 with tool drive
Number of tool slots	12	12
Max. permissible speed at tool coupling	max. 4,000 rpm	max. 4,000 rpm
Tool output	4.82 KW	4.82 KW
Max. tool torque	20 Nm	20 Nm
Max. chuck height, width square	25 x 25 mm	25 x 25 mm
Max. chuck diameter drilling rod	Ø 32 mm	Ø 32 mm
Precision		
Repetition accuracy	± 0.005 mm	± 0.005 mm
Positioning accuracy	± 0.005 mm	± 0.005 mm
Travel		
X axis	305 mm	305 mm
Z axis	750 mm	1,250 mm
Y axis (optional)	+/- 50 mm	+/- 50 mm
Feed speed		
X/Z axis	24,000 mm/min	24,000 mm/min
Motor torque		
X axis	11 Nm	11 Nm
Z axis	27 Nm	27 Nm
Tailstock		
Tailstock chuck	MK 5	MK 5
Travel	650 mm	1,150 mm
Tailstock quill diameter	90 mm	90 mm
Tailstock - quill stroke hydraulic	120 mm	120 mm
Dimensions		
Length with/without chip conveyor	3,015 / 4,114 mm	3,515 / 4,614 mm
width x height	1,856 x 2,016 mm	1,856 x 2,016 mm
Overall weight	5,400 kg	6,500 kg

* other turning lengths on request * depending on installed lathe chuck

Serial equipment		
· C axis brake system	· Programmable tailstock	· Swarf conveyor
· Automatic Renishaw tool measuring	· Coolant system	· Chip carriage
· Portable electronic handwheel	· Heat exchanger	· Operating tool
· Hydraulic tool turret VDI 40 Sauter	· Bar feeder interface	· Parts gripper
· Hydraulic three-jaw lathe chuck Ø 200 mm S 500	· Spindle interior cooling CTS 20 bar (we recommend an extraction)	· Automatic door opener
· Hydraulic three-jaw lathe chuck Ø 250 mm S 750		

OPTIturn® S 500/S 750

STANDARD EQUIPMENT

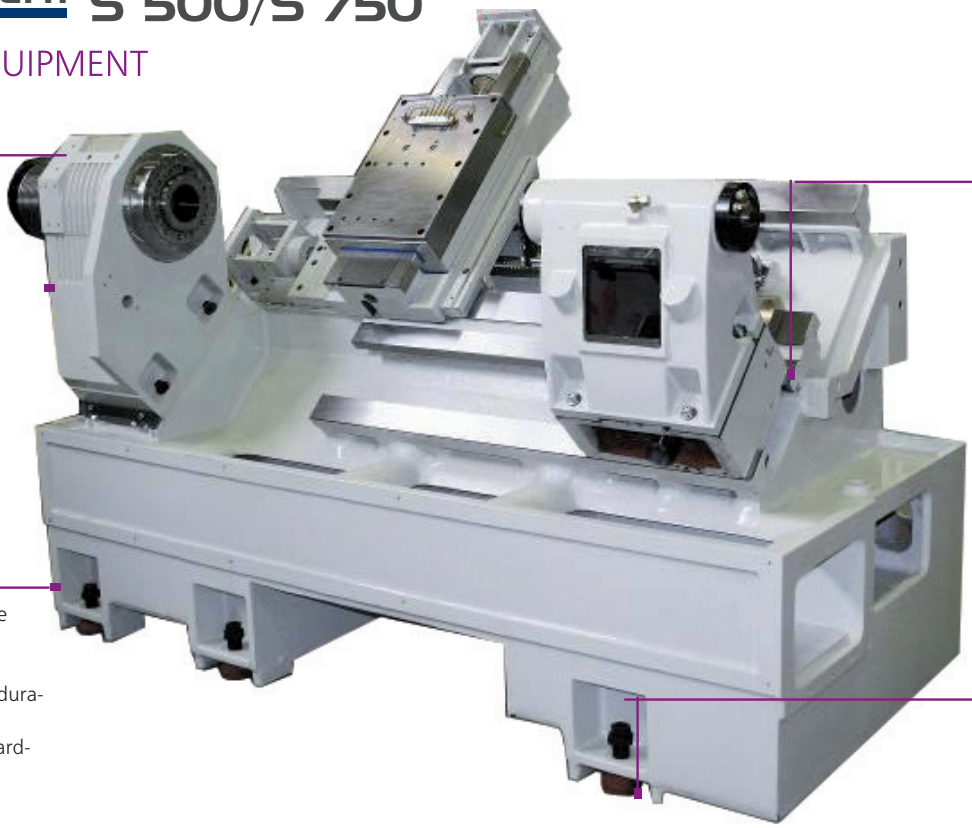

Spindle stock
- Cast meehanite
- Cooling ribs on outside dissipate heat more effectively

Guide
Excellent stiffness and stability

Machine bed
- Cast from a single piece
- Pronounced ribbing
- 45-degree slope
- Excellent stiffness and durability
- Cast meehanite with hardness HB 170 ~ 180

Machine feet
- Six pcs.
- Optimal machine levelling

Laser measuring
- Guaranteed repetition and positioning accuracy

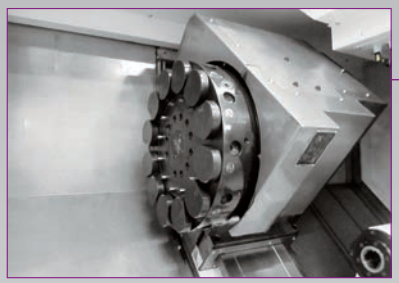

Tool changer system and C axis
- Excellent part precision and fast tool changes
- Swivel range high torque and maximum stability
- Tool-to-tool time: 0.35 seconds
- 180 degrees: 1.2 seconds

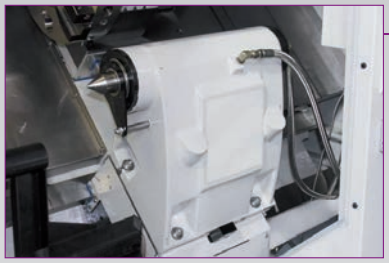

Programmable tailstock
- Heavy duty version
- Excellent stiffness
- Optionally via a program or directly by the operator with the standard foot pedal

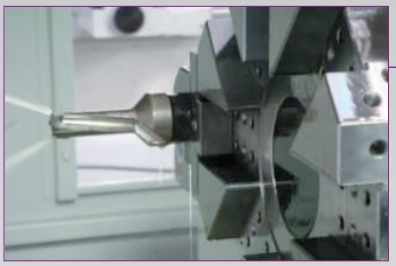

Internal tool cooling CTS
- Pressure: 20 bar
- Filter precision 25µm

(we recommend an extraction)

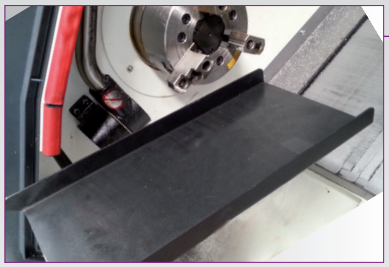

Part gripper device
- Automatic

Preparation for bar feeder
- Connection for bar feeder

SPECIAL EQUIPMENT

6 Air conditioner

5 Oil separator

4 Bar feeder

1 Y axis
Including
Tool turret

2 Steady

3 Tool holder

	S 500	S 750		
1	351515018	351517018	**Y axis includes Sauter tool turret with drive**	· Stroke +/- 50 mm* · instead of standard equipment > hydraulic tool turret
2	351515010	351517010	**Fixed steady**	· Passage Ø 20 mm to Ø 200 mm
3	351515006	351517006	**Axially driven tool holder**	· Spring collet ER 32
	351515007	351517007	**Radially driven tool holder**	· Spring collet ER 32
	351515008	351517008	**Radially driven tool holder on rear side**	· Spring collet ER 32
4	351515003	351517003	**Bar feeder Pro V 65 E** 1.5 metres	· "Pro V 65 E / Pro V 65 LE" on page 86
		351517002	**Bar feeder Fedek DH-65L** 1.5 metres	· "FEDEK DH-65 / DH-65 L" on page 86
	351515012	351517012	**Bar feeder Pro V 65 LE** 3.2 metres	· "Pro V 65 E / Pro V 65 LE" on page 86
5	351515001	351517001	**Oil separator**	· With rotary disc, removes oil from the coolant · Capacity: 1 litre per hour
6	351515009	351517009	**Air conditioner**	· for the switch cabinet · Instead of standard equipment > heat exchanger
	9001051		**Software DXF-Viewer/Reader**	· from Version 4,7

* longer stroke on request

"Lathe chucks and jaws" on page 86

Special equipment can only be ordered ex works. Contact your dealer for pricing and further options, or mail us on:
info@optimum-maschinen.de

LATHE CHUCKS AND JAWS

L 44		
351433015	**Three-jaw lathe chuck manual** Ø 200 mm	· instead of standard equipment > three-jaw lathe chuck hydraulic Ø 150 mm
351433016	**Four-jaw lathe chuck manual** Ø 250 mm	· instead of standard equipment > three-jaw lathe chuck hydraulic Ø 150 mm
351433018	**Three-jaw lathe chuck hydraulic** Ø 200 mm	· instead of standard equipment > three-jaw lathe chuck hydraulic Ø 150 mm
351433020	**Four-jaw lathe chuck hydraulic** Ø 200 mm	· instead of standard equipment > three-jaw lathe chuck hydraulic Ø 150 mm
3519706	**Soft insert jaws**	· for the factory standard > three-jaw lathe chuck hydraulic Ø 150 mm
3519726	**Hard insert jaws**	· for the factory standard > three-jaw lathe chuck hydraulic Ø 150 mm
3519707	**Soft insert jaws**	· for the three-jaw lathe chuck hydraulic Ø 200 mm (3514330 18) · for the four-jaw lathe chuck hydraulic Ø 200 mm (3514330 20)
3519727	**Hard insert jaws**	· for the three-jaw lathe chuck hydraulic Ø 200 mm (3514330 18) · for the four-jaw lathe chuck hydraulic Ø 200 mm (3514330 20)

L 440/L460			
351441008	351442008	**Three-jaw lathe chuck manual** Ø 200 mm	
351441011	351442011	**Four-jaw lathe chuck manual** Ø 250 mm	
351441028	351442028	**Three-jaw lathe chuck hydraulic** Ø 250 mm	· instead of standard equipment > three-jaw lathe chuck hydraulic Ø 200 mm
351441031	351442031	**Four-jaw lathe chuck hydraulic** Ø 250 mm	· instead of standard equipment > three-jaw lathe chuck hydraulic Ø 200 mm
351441010	351442010	**Soft block jaws**	· for the three-jaw lathe chuck manual Ø 200 mm (3514410 08)
3519707		**Soft insert jaws**	· for the factory standard > three-jaw lathe chuck hydraulic Ø 200 mm
3519727		**Hard insert jaws**	· for the factory standard > three-jaw lathe chuck hydraulic Ø 200 mm
3519708		**Soft insert jaws**	· for the three-jaw lathe chuck hydraulic Ø 250 mm (3514410 28) · for the four-jaw lathe chuck hydraulic Ø 250 mm (3514410 31)
3519728		**Hard insert jaws**	· for the three-jaw lathe chuck hydraulic Ø 250 mm (3514410 28) · for the four-jaw lathe chuck hydraulic Ø 250 mm (3514410 31)

L 500 / L520			
351443006	351444006	**Three-jaw lathe chuck manual** Ø 300 mm	· 2,800 rpm, 103 mm keyway
351443020	351444019	**Three-jaw lathe chuck hydraulic** Ø 300 mm	· Instead of the standard equipment > hydraulic three-jaw lathe chuck Ø 250 mm
351443029	351444027	**Four-jaw lathe chuck hydraulic** Ø 300 mm	· Instead of the standard equipment > hydraulic three-jaw lathe chuck Ø 250 mm
351443008	351444008	**Soft block jaws**	· for the three-jaw lathe chuck manual Ø 300 mm (3514430 06)
3519708		**Soft insert jaws**	· for the factory standard > three-jaw lathe chuck hydraulic Ø 250 mm
3519728		**Hard insert jaws**	· for the factory standard > three-jaw lathe chuck hydraulic Ø 250 mm
3519709		**Soft insert jaws**	· for the three-jaw lathe chuck hydraulic Ø 300 mm (3514430 20) · for the four-jaw lathe chuck hydraulic Ø 300 mm (3514430 29)
3519729		**Hard insert jaws**	· for the three-jaw lathe chuck hydraulic Ø 300 mm (3514430 20) · for the four-jaw lathe chuck hydraulic Ø 300 mm (3514430 29)

S 600		
351506024	**Four-jaw lathe chuck hydraulic** Ø 200 mm	· instead of standard equipment > three-jaw lathe chuck hydraulic Ø 200 mm
351506008	**Three-jaw lathe chuck hydraulic** Ø 250 mm	· instead of standard equipment > three-jaw lathe chuck hydraulic Ø 200 mm
351506025	**Four-jaw lathe chuck hydraulic** Ø 250 mm	· instead of standard equipment > three-jaw lathe chuck hydraulic Ø 200 mm
3519707	**Soft insert jaws**	· for the factory standard > three-jaw lathe chuck hydraulic Ø 200 mm · for the four-jaw lathe chuck hydraulic Ø 200 mm (3515060 24)
3519727	**Hard insert jaws**	· for the factory standard > three-jaw lathe chuck hydraulic Ø 200 mm · for the four-jaw lathe chuck hydraulic Ø 200 mm (3515060 24)
3519708	**Soft insert jaws**	· for the three-jaw lathe chuck hydraulic Ø 250 mm (3515060 08) · for the four-jaw lathe chuck hydraulic Ø 250 mm (3515060 25)
3519728	**Hard insert jaws**	· for the three-jaw lathe chuck hydraulic Ø 250 mm (3515060 08) · for the four-jaw lathe chuck hydraulic Ø 250 mm (3515060 25)

S5 00		
351515013	**Four-jaw lathe chuck hydraulic** Ø 200 mm	· instead of standard equipment > three-jaw lathe chuck hydraulic Ø 200 mm
351515016	**Three-jaw lathe chuck hydraulic** Ø 250 mm	· instead of standard equipment > three-jaw lathe chuck hydraulic Ø 200 mm
351515017	**Four-jaw lathe chuck hydraulic** Ø 250 mm	· instead of standard equipment > three-jaw lathe chuck hydraulic Ø 200 mm
3519707	**Soft insert jaws**	· for the factory standard > three-jaw lathe chuck hydraulic Ø 200 mm · for the four-jaw lathe chuck hydraulic Ø 200 mm (3515150 13)
3519727	**Hard insert jaws**	· for the factory standard > three-jaw lathe chuck hydraulic Ø 200 mm · for the four-jaw lathe chuck hydraulic Ø 200 mm (3515150 13)
3519708	**Soft insert jaws**	· for the three-jaw lathe chuck hydraulic Ø 250 mm (3515150 16) · for the four-jaw lathe chuck hydraulic Ø 250 mm (3515150 17)
3519728	**Hard insert jaws**	· for the three-jaw lathe chuck hydraulic Ø 250 mm (3515150 16) · for the four-jaw lathe chuck hydraulic Ø 250 mm (3515150 17)

S 750		
351517013	**Four-jaw lathe chuck hydraulic** Ø 200 mm	· instead of standard equipment- three-jaw lathe chuck hydraulic Ø 250 mm
351517015	**Four-jaw lathe chuck hydraulic** Ø 300 mm	· instead of standard equipment > three-jaw lathe chuck hydraulic Ø 250 mm
3519707	**Soft insert jaws**	· for the four-jaw lathe chuck hydraulic Ø 200 mm (3515170 13)
3519727	**Hard insert jaws**	· for the four-jaw lathe chuck hydraulic Ø 200 mm (3515170 13)
3519708	**Soft insert jaws**	· for the factory standard > three-jaw lathe chuck hydraulic Ø 250 mm · for the four-jaw lathe chuck hydraulic Ø 250 mm (3515170 15)
3519728	**Hard insert jaws**	· for the factory standard > three-jaw lathe chuck hydraulic Ø 250 mm · for the four-jaw lathe chuck hydraulic Ø 250 mm (3515170 15)

SHORT BAR LOADER

PRO V 65 E / PRO V 65 LE

The Pro V 65 bar loader is the ideal solution for automatic loading of the CNC lathe with short bars. The loading magazine for the E loader is designed for rod lengths up to 1,200 mm and the LE for 1,500 mm
The Pro V 65 bar loader offers a simple and economic alternative which at the same time guarantees maximum productivity on a small footprint.

Intuitive control unit and remote control
A user-friendly control unit and remote control ensure the interplay between the loading magazine and the lathe.
This allows the owner to run the production process safely and efficiently.

Mitsubishi PLC controller
- ▶ Touchscreen digital interface with LCD display
- ▶ Various function and parameter settings are clearly visible on the display. This makes operations easy and clear-cut
- ▶ Alarm display for troubleshooting
- ▶ Basic functions can be managed on the remote control

Rotary encoder

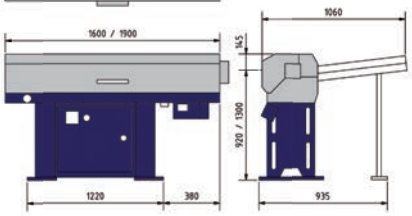

	Pro V 65 E	Pro V 65 LE
Diameter	Ø 5 mm to Ø 65 mm	
Bar length	1,200 mm	1,500 mm
Spindle height	920 mm / 1,300 mm	
Loading weight	250 kg	280 kg

FEDEK DH-65 / DH-65 L

- ▶ Convenient parameter setting without changing the program
- ▶ Excess length can be set arbitrarily
- ▶ Short offcuts can be set to a minimum to reduce material loss
- ▶ Interface with any kind of CNC lathe
- ▶ Self-detection for unusual movements on the LCD display
- ▶ Remote control offers a convenient running test and adjustment options
- ▶ Self-detection for pieces that are too short
- ▶ Self-detection and warning in case of missing material
- ▶ Self-detection and warning for position

Convenient control unit and remote control
A user-friendly control unit and remote control ensure the interplay between the loading magazine and the lathe.
This allows the owner to run the production process safely and efficiently.

PLC controller
- ▶ Alarm display for convenient troubleshooting
- ▶ Intelligent human/machine interface offers convenient parameterisation
- ▶ No damage to bar surface

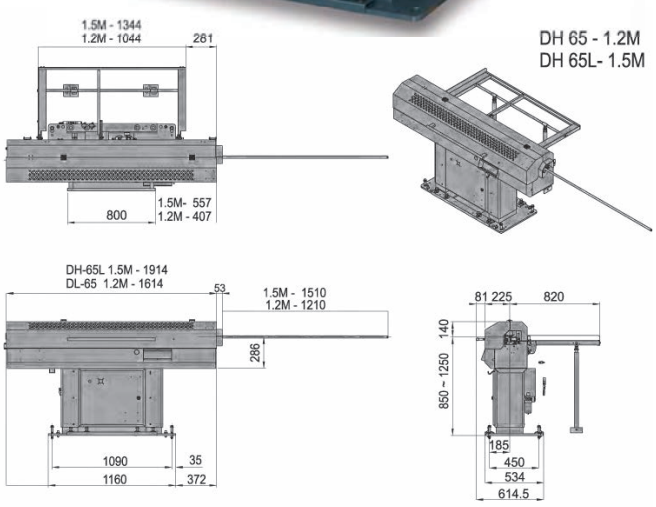

	DH-65	DH-65L
Diameter	Ø 5 mm to Ø 65 mm	
Bar length	1,210 mm	1,510 mm
Spindle height	850 mm / 1,250 mm	
Loading weight	298 kg	328 kg

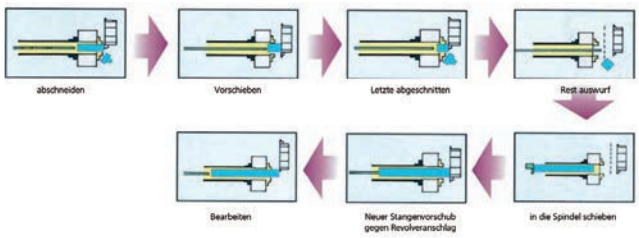

OPTImill® F 150 ROBOTERSYSTEM

EDUCATION

AUTOMATION

Your route with us to an automated future

The OPTIMUM Premium CNC milling machine OPTImill® F 150 with SIEMENS SINUMERIK control and a KUKA KR 6 R900 sixx robot system connected offer the ideal conditions for automatic workpiece loading and discharging.

F 150
with special equipment

RENISHAW
OMI-2T RECEIVER

SCHUNK
2-FINGER PARALLEL GRAB

SCHUNK
GSP PLUS 160

KUKA
KR 6 R900 SIXX AGILUS

KUKA
KUKA control**CR 4**

OPTIMUM
MASCHINEN - GERMANY
KCR safety cage

isoloc
Your perfection is our aim
Element

SIEMENS **SINUMERIK 828 D**

Panel-based compact CNC
Technologies:
- Turning and milling
- Up to 8 axes/spindles
- 1 machining channel
- 8.4"/10.4" colour display
- S7-200 PLC

Our SIEMENS 828 D options already integrated for you:

- ▶ Safety integrated (see page 98)
- ▶ Residual material detection and machining
- ▶ ShopMill work step programming
- ▶ Managing network drives
- ▶ 3-D simulation
- ▶ Logging

EDUCATION BUNDLE

CNC milling machine OPTImill F 150

The complete package centred on the Premium CNC milling machine OPTImill F 150 with Siemens Sinumerik 828D control system including Schunk clamping technology, Mediabloc CFC and the robust KCR safety cage.

PACKAGE COMPONENTS

Education by OPTIMUM® MASCHINEN - GERMANY

Premium CNC milling machine
OPTImill F 150 with Siemens Sinumerik 828D control
and 24 tool changer

Schunk clamping technology

4 pcs. ISOLOC NTS levelling platen

KCR safety cage

Training package

Training	Trades/Industry
3519010	3519011

More packages on request!

KUKA EDUCATION BUNDLE

Industrial robot KR 6 R900 sixx AGILUS

The extremely compact and robust KUKA KR 6 R900 sixx is one of the newest, fastest and most reliable robots in its class.
With six axes, a maximum load-bearing capacity of 6 kg and a reach of approx. 901 mm, it is perfectly suited for getting started with state-of-the-art robotics.
On request, the KUKA Education Bundle can also be offered with other KUKA robots.

PACKAGE COMPONENTS

Education by OPTIMUM® MASCHINEN - GERMANY

Industrial robot
KUKA KR 6 R900
sixx AGILUS

KUKA adjustment set

Training	Trades/Industry
35111010	35111011

HARDWARE PACKAGE

To facilitate your entry into machining, we offer a hardware package that lets you implement the Sinutrain practice piece in reality. You receive everything you need to hold a finished component in your hands at the end of the training with the help of the Siemens training video and OPTIMUM guide.

PACKAGE COMPONENTS

Chuck
Milling head holder
Weldon holder
Adapter, pull stud
Collet chuck holder, base rails

4 aluminium blanks

EMUGE end mill set
(HM deburrer, end mill, various HM end milling cutters, spherical cutter, HM toroidal cutter, Micro HM end mill, end mill holders)

Hardware package
3519012

MEDIA PACKAGE

The media package is perfectly suited to visualising the events in the workspace, also for external viewers. Whether this be the group of trainees, or the employee themself. We capture the events with a splash-water protected camera, and transfer them to a TV (via WiFi or HDMI).

Using the matching computer, you can establish a connection to the machine via RJ45 and visualise the control unit in real time on the monitor.

Similar to fig.

PACKAGE COMPONENTS

Multimedia table

LCD TV 127 cm (50 inch) with HDMI connection

Splash water-protected camera
Housing including holder

Desktop computer

Installed Siemens Toolbox CD

Keyboard and mouse

Media package
3519013

COMPUTER PACKAGE

What you receive from us is a PC with monitor on which a Sinutrain Demo Version is installed; you need to activate this version. If you decide to purchase a Sinutrain license or classroom license from us, this will naturally be pre-installed. On purchasing a classroom license you also receive a student version with a modified runtime.

PACKAGE COMPONENTS

Desktop computer
Monitor
Keyboard and mouse

Software installation as per order, optionally with

1. Sinutrain Milling + CNC Software Siemens + Machine Integration with Sinutrain

Computer package
3519014

or

2. Sinutrain Milling Demo + CNC Software Siemens + Machine Integration with Sinutrain

Computer package
3519020

Similar to photo

TRAINING VIDEO PACKAGE

This package makes it easy for you to get started in the world of automation.
Step by step, you are shown all the important steps so that you can pass them on to your students.

PACKAGE COMPONENTS

DVD 1: Commissioning the machine

DVD 2: Fitting and operating the robot cell

DVD 3: Network connection and external processing of programs. Service deployment with online support by the manufacturer

DVD 4: Working with Renishaw

Training video package
3519015

only in german language

GSM PACKAGE

To make automation perfect, the Siemens SINUMERIK 828D offers the option of sending text messages to the operator via a GSM module, thus keeping the operator up-to-date with the events on the machine.

SIEMENS

Fig. GSM module, antenna and cable

PACKAGE COMPONENTS

GSM module

Antenna

Connecting cable

Prepaid SIM Card

GSM package
3519017

WORKBENCH PACKAGE

To be able to machine workpieces before and after work, we also offer you a workbench that contains everything you need to complete your work.

Stürmer® Maschinen

PACKAGE COMPONENTS

CNC in-line workbench 1,500 x 750 x 40 mm
with beech wood multiplex workbench top
Drawer block substructure
CNC tool holder frame
CNC plastic inserts SK 40
Precision parallel vice
File set
Soft-head hammer
File brush
Aluminium metal saw bow
Measuring tool set
Allen key set
Manual deburring tool
Deburring tool
Industrial paint brush
Plastic protective jaws
Hand brush
Metal dustpan

Workshop package
3519016

Similar to fig.

OPTIMUM PARTNERS

As a pioneer of robotics, KUKA has developed automation solutions for many years and is the global innovation leader today. Robots are viewed as the key to competiveness in industry. With the KUKA training package, your training institute can teach contemporary robotics skills to students.

www.KUKA-robotics.com

For our customers, we are developing nationally and internationally to the leading institute and media house in vocational training. We are continuing to expand our position as a committed expertise owner for companies, associations, organisations and partners. The focus of our activities is on innovative teaching media development and in professional and rapid implementation in the form of educationally valuable teaching and learning concepts.

www.christiani.de

Siemens Machine Tool Systems is a global and innovative partner to the tool machine industry of many years standing. Siemens offers the SINUMERIK CNC, a highly productive automation solution for workshops, contract manufacturing and high-volume industrial production.
Whether individual parts or mass production, simple or complex workpieces – SINUMERIK always offers a matching solution.

www.siemens.co.uk

EMUGE Franken has offered premium machining technology for more than 90 years. State-of-the-art production facilities and quality assurance are the basis for consistently high quality.
Thanks to its sales organisation in some 50 countries, EMUGE Franken is easy to reach for its customers, and can guarantee individual customer support.

www.emuge.com

Renishaw is the market leader in industrial measuring technology and offers powerful solutions in this field. Global locations offer customers fast and expert service on site. Thanks to Renishaw, you have complete control over your manufacturing processes.

www.renishaw.com

AURON GmbH, a specialist in CAD/CAM solutions, has specialised for many years on CAD solutions by the global market leader AUTODESK® , and since 2010 also on the integrated CAM solution InventorCAM®. – Focuses: Machine and plant manufacturing, factory planning, architecture – Strengths: Requirements analysis/substantiated software recommendations, implementation, training/teaching, helpline, programming of tailored applications. Customers all over Germany Many years of experience with customers from the fields vocational colleges/training companies.

www.auroncad.de

SCHUNK products with typical SCHUNK quality – manufactured at 4 plants – are sold worldwide. A dense network of sales partners, subsidiaries and offices designed for customer-orientation, and our own expert local advisory staff guarantee the best possible advice, precise know-how transfer, fast service and absolute supply assurance.

www.schunk.de

Piston and screw-type compressors, compressed air treatment, distribution and tools for industry and trades. All popular screw-type compressors are available from stock. Our own final assembly for different variants of compressor, vessel and treatment in Austria allows ready-for-shipment preparation within just a few workdays. This ensures a high level of flexibility and fast delivery ability for the requirements of the German market.

www.aircraft-compressors.com

State-of-the-art measuring and analysis technology that serves to optimise your machines in terms of vibration and thus improve its vibration behaviour. The result is measurable quality improvements for products while at the same time reducing the noise level in production shops.
ISOLOC networks intensively with universities and technical colleges and sits on various DIN and other expert committees in the interest of consistent orientation on the requirements of the industry and of product development.

www.isoloc.de/en

Education by OPTIMUM® MASCHINEN - GERMANY

Email:
education@optimum-maschinen.de

At our headquarters in Hallstadt near Bamberg, trainers have the option of using a free training day to gain a comprehensive overview of all aspects of the OPTIMUM Siemens training drive.

Download our brochure here
www.optimum-maschinen.de

prospectus
Training packages F 150


SIEMENS
SINUMERIK 808D
TURNING

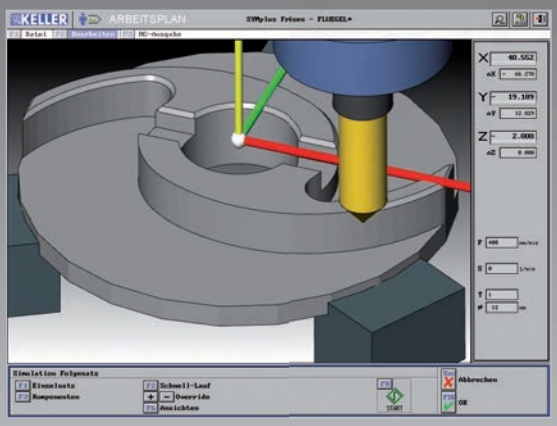
KELLER
ARBEITSPLAN

Service and support

SPARE PARTS

Service packages for preventive maintenance & a reliable supply of spare parts

Working CNC machines with a comprehensive feature set and optimum price and performance – this is what OPTIMUM Maschinen Germany stands for. Each one of our products impresses with its quality, precision, long service life and value stability. In addition to our own manufacturing facilities, we have now produced throughout the more than 23 years of our existence at manufacturers capable of meeting our high quality requirements.

Before purchasing a CNC machine, it is especially important to also consider the indirect costs in addition to the cost of purchasing. This means, for example, maintenance, repairs, or taking CNC machine downtime into consideration. To ensure the profitability of your OPTIMUM CNC machine, we offer you maintenance options to help prevent time-consuming repairs, check-ups and comprehensive service packages.

In the case of a repair, you benefit from our reliable spare parts supply:
one of the basic premises of our customer orientated service solution is fast availability of spare parts. We match planning, coordination and provision of parts in a targeted way. This improves economy, after all, machines repaired quickly can be quickly redeployed on your lines.

SERVICE

Fast & reliable – with decades of experience

Whether planned service or fast help after a sudden machine failure, our intensively trained OPTIMUM service engineers are ready to help you with their many years of experience. They quickly and reliably take care of repairing your CNC machines. With our carefully considered service solution we help to keep your OPTIMUM CNC machine working in a trouble-free way.

Know-how for satisfied customers: our Engineering department has a well-coordinated team of specialists with excellent engineering qualifications. We view the clear, technical orientation of our staff as the basis for a high level of customer satisfaction. This is what you can expect of us:

- Fast and comprehensive advice
- Expert on-site service
- Reliable help for maintenance, repairs and interruptions

Our preventive maintenance options, check-ups and service packages ensure trouble-free and economic use of your CNC machines. Our staff handle all of this in an expert way. Major benefits: regular servicing and maintenance by our Service Team improves the functional capability of your machines, thus extending their uptime.

SERVICE DATA BACKUP

Modules:
Data backup

Machine type:
Lathes/Milling machines

Our state-of-the-art data backup fully backs up your machine data. This includes axis compensation values, parameters, NC and PLC data, zero points and CNC programs. This saves a huge amount of time, and thus money, for re-entering the data in case of data loss. Thanks to a data backup, your information can be simply and quickly restored. While restoring the data, our technician also checks the memory buffer battery* and replaces it if needed.

Service	Article no.
Data backup	9001100
Includes travel expenses up to 300 kilometres distance	

FEATURES:
- Backup of all relevant data
- Backup to a storage medium
- Buffer battery* check and replacement if needed
- CNC program backup option

YOUR BENEFITS:
- Prevents data loss as you have a backup of your machine data in case of a malfunction
- Avoids downtime

DETAILS:
- Duration individual
- Incl. travel expenses, plus accommodation

SERVICE GEOMETRY CHECK

Modules:
Geometry check

Machine type:
Lathes/Milling machines

During the Service Geometry Check, our engineers precisely and comprehensively verify your machine's geometry. The measuring results are documented, thus allowing conclusions on any anomalies to be drawn. In case of problems, our staff give you expert advice, showing you where the problems lie and providing an inexpensive solution. The Service Geometry Check is especially useful in the scope of preventive maintenance to discover and compensate for wear at an early stage. This avoids malfunctions and machine failures.

Service	Article no.
Geometry check	9001105
Includes travel expenses up to 300 kilometres distance	

FEATURES:
Geometry check
- Circular shape test with Renishaw QC20 (milling machines)
- Detailed test report of all measuring results
- Analysis and evaluation of the measuring results
- Quotation for eliminating any identified defects

YOUR BENEFITS:
- Discovers wear at an early stage
- Machine maintenance can be scheduled in good time
- Boost production quality
- Makes service costs easy to calculate
- Production assurance

DETAILS:
- Duration individual
- Incl. travel expenses, plus accommodation

Service and support

Preventive maintenance for better economy

Just like your car's annual service, preventive maintenance of CNC machines in the form of a service ensures that the individual parts are kept in good shape. Our preventive maintenance options include planning and handling of maintenance for your OPTIMUM CNC machine. At the same time, they include preventive repairs and preventive part replacement. We want your CNC machine to work perfectly and to ensure its long service life. In work package or around eight hours, our engineers, for example, inspect the coolant, lubrication and compressed air systems and check the electrical and mechanical systems. The biggest advantage is that any weak points can be immediately eliminated – before extensive repairs are needed. The cost of preventive maintenance is quickly amortised as your CNC machine's efficiency increases. Take a look at the many items that our inspections include:

FEATURES:

Coolant system:
- Remove/check coolant pump and motor
- Clean coolant pump filter
- Check lines and screw connections for leak tightness

Lubrication system:
- Check and/or replace filter units
- Check lines and screw connections for leak tightness
- Perform centralised lubrication system function test

Compressed air system:
- Perform pressure test
- Check maintenance unit
- Check and/or replace filters

For CNC lathes
- Replace oil filter on hydraulic unit
- Check hoses and screw connections for leak tightness

Electrical system:
- Clean switch cabinet
- Check terminals and connections
- Replace air filter
- Check limit switches and safety equipment

Mechanical system:
- For CNC milling machines
- Geometric measurement of the machine with Renishaw QC20 test report
- Check and adjust levelling of machine
- Check reverse clearance of the X, Y, and Z axes and adjust electronically
- Check spindle positioning
- Check covers and scrapers
- Check concentricity of the spindle taper
- Check spindle taper for damage
- Check counterweight system or compressed air cylinders
- Check axis running noise
- Check spindle running noise
- Completely check/lubricate tool changer system
- Check drive belt on main spindle drive
- Visual check of lines and screw connections

For CNC lathes
- Check and adjust levelling of machine with Renishaw QC20 test report
- Check reverse clearance of the X, Y, and Z axes and adjust electronically, or adjust wedge rails
- Check covers and scrapers
- Measure concentricity of main spindle
- Check axis running noise
- Check main spindle running noise
- Completely check/lubricate tool changer system
- Check main spindle belt drive and replace if needed
- Visual check of lines and screw connections
- Check and adjust turret alignment
- Check and adjust spindle alignment based on a sample part

DETAILS:

- Work package approx. 8 working hours

Service	Article no.
Maintenance	9001110
Includes travel expenses up to 300 kilometres distance	

Maintenance contracts: Comfort, Medium or Basic

The objective of our service is to make maintaining and repairing make your OPTIMUM CNC machine a simple as possible. This is why OPTIMUM offers you a variety of maintenance contracts that you can tune to perfectly match your requirements and wishes.

You can choose between our Comfort, Medium and Basic maintenance contract options. One thing you can rest assured of: our engineers are always there to help you in case of problems, whether on the phone, by remote maintenance using teamview, or on-site. The following options are available:

Options *	Comfort:	Medium	Basic
Article no.	9001115	9001120	9001125
Response to a problem by phone	Within one working day	Within 1-2 working days	Within 1-3 working days
Technical troubleshooting by phone	✔	✔	✔
Preventive maintenance options	Every six months	Annually	Annually
Remote maintenance using teamviewer**	✔	✔	
Non-wear part supply parts supplied by express delivery	✔		

Includes travel expenses up to 300 kilometres distance

** the prerequisites must be in place customer-side

SYMplus Milling

for low-cost, fast and economic work.

SYMplus Milling is the ideal software supplement to all SIEMENS-controlled OPTIMUM milling machines.

CNC Software SYMplus	
Milling	3583850
· Version 6.0	
· Including CmStick (holds the license)	
· Post-processor	
USB adapter	3571968
· RS 232	

As a training software package, SYMplus Milling supports a rapid introduction to DIN programming as per PAL and SIEMENS.

But above all, SYMplus is a genuinely easy to learn CAD/CAM system that helps you save programming time, avoid crashes, reduce production time and create NC programs for various OPTIMUM machines or SIEMENS controls (802S,808D, 828D, 840D, ...) in a uniform interface.

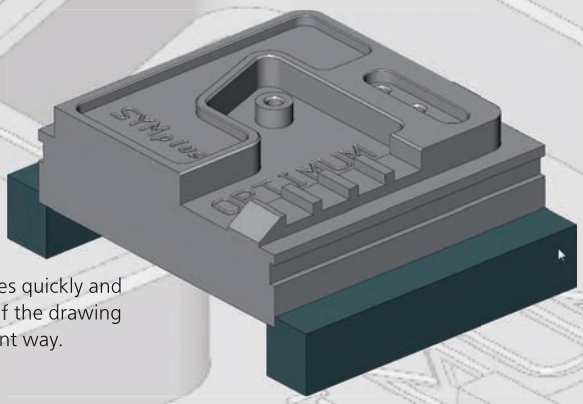

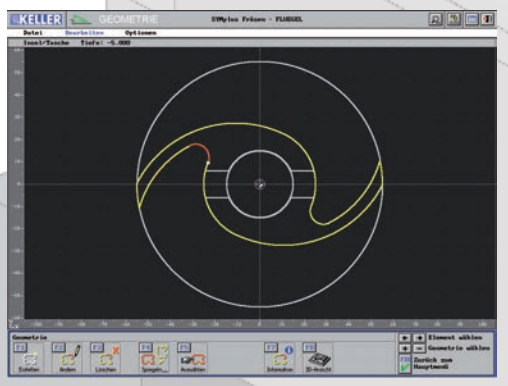

CAD - Geometry Creation

SYMplus lets you program workpieces quickly and simply in a graphical interface, even if the drawing is not dimensioned in an NC compliant way.

Alternatively, you can use CAD contours from DXF.

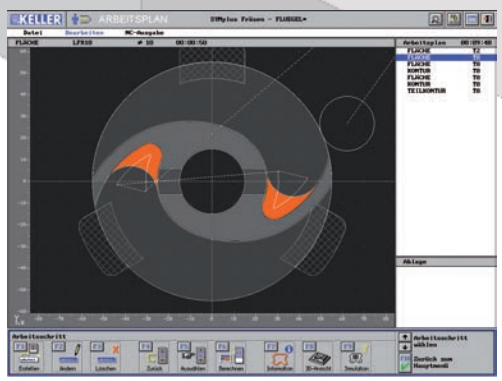

CAM - work schedule generation

Machining is also defined graphically using pictograms. You can conveniently compare production strategies and thus optimise machining. Timing computation helps you with costing.

Residual material detection relates to the entire process; the blank is continually tracked.

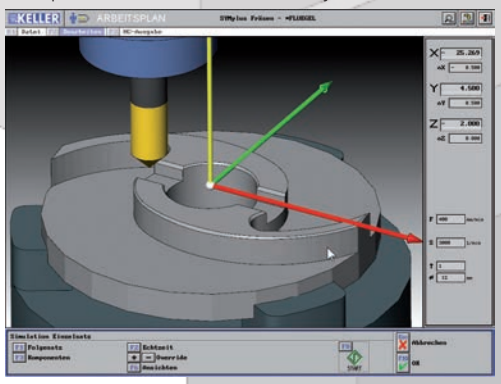

2D simulation shows many details, such as allowances and the cutting path of every single milling run. You can also "capture" control dimensions (not shown). 3D simulation gives you the best possible overview of machining.

You create the NC program itself with just a few clicks and transfer it to the control, for example using a USB stick.

SYMplus Milling runs on Windows 7 and Windows 8. More details and additional modules available on request.

SYMplus Turning

Workshop capable CAD/CAM system with 802S training.

SYMplus Turning is the ideal software supplement to your OPTIMUM CNC lathe.

CNC Software SYMplus	
Turning	3583852
· Post-processor	
USB adapter	3571968
· RS 232	

We also have SYMplus with the identical interface for turning technology (see left side).

Because you can work independently of a specific control, you only need to master one system to be able to flexibly spread the load across multiple machines.

Integrated didactical components help you train new staff and prepare apprentices for their exams.

System requirements for the plus systems:
- Recommended operating systems: Microsoft Windows® 7/8/8.1 (32- or 64-bit)
- Screen resolution min. 1024 x 768
- OpenGL-compatible 3D graphics card, e.g. GeForce GT 210 (1024 MB)
- RAM: min. 2 GB
- Approx. 2 GB free disc space per technology for system data

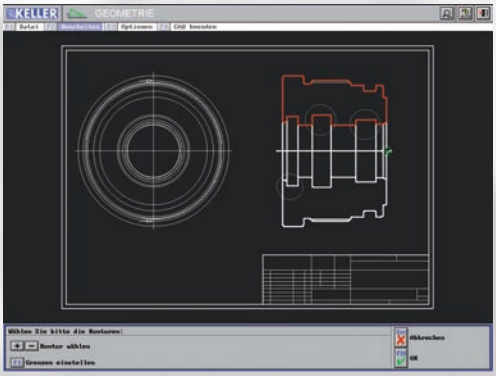

CAD - Geometry Creation

If you have a drawing in an electronic format, you can transfer the turning contour with just a few clicks or key presses.

Of course, there is also a dialogue-based contour computer for transferring hard copy drawings.

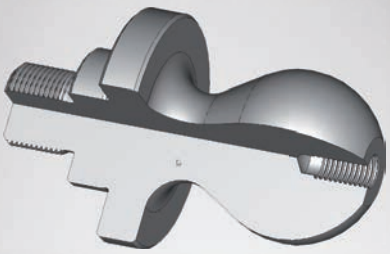

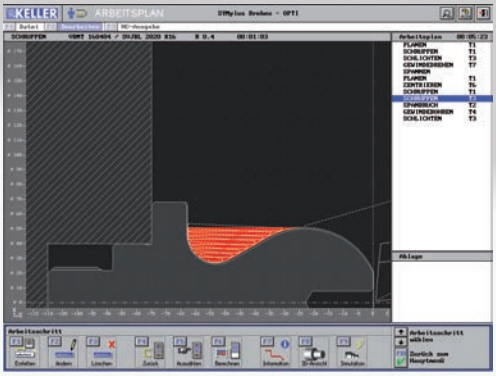

CAM - work schedule generation

Like in milling, you define the work steps in a graphical interface and benefit from residual material detection throughout the entire production process (incl. re-clamping).

Zoom into the measuring function in the 2D simulation, and you can precisely monitor the dimensional accuracy of the machining process. Collision monitoring of the cutting edge and holders is performed. In the 3D simulation (not shown) you can also monitor adjacent tools.

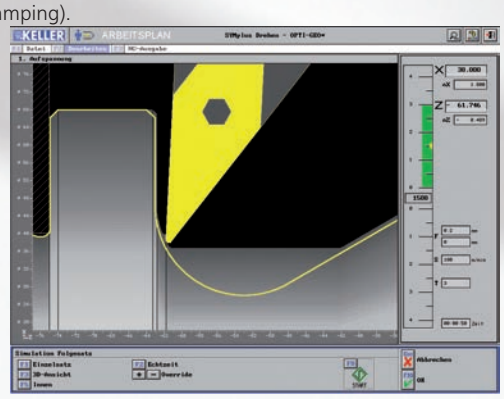

Finally, you select the post-processor for the machine on which you will be producing, and transfer the program.

SYMplus Turning runs on Windows 7 and Windows 8. More details and additional modules available on request.

Safety technology

SIEMENS SAFETY INTEGRATED
Set up work with open doors

SINUMERIK Safety Integrated

- This comprehensive safety package for person and machine safety is extremely reliable, efficient and economic.
- It ensures safe and practical operation of the machine under all required operating conditions.
- All safety functions meet the requirements of SL 2 /PL d and are accordingly certified and NRTL listed.
- Comprehensive, highly effective safety functions lead to fast, situation-specific responses in case of error by integrating the safety features with the drive and control technology.
- Safe monitoring of speed, standstill and position are included, among other features.
- Safe brake management ensures crash-safety for vertical axes. All safety-relevant signals can be linked thanks to safe, programmable logistics - without additional hardware.

CNC introductory training

- Commissioning includes aligning, acceptance and functional testing of the machine.
- The customer is required to unpack the machine, remove the preservative, clean the machine, move it to the installation site, and connect it to the electrical and/or pneumatic power supply.
  Following this, your employees are given a brief introduction to the machine during which its function, operation, setup, diagnostics and maintenance are explained.

- Commissioning and introductory training on site:
- Billing unit:
  - Per hour or part of hour

- Commissioning and introductory training on site:
- Billing unit:
  - Per hour or part of hour
  - Travel expenses (travel time and lump sum for mileage)
  - Expenses at daily rate
  - Costs of overnight accommodation where applicable

CNC introductory training	9000509

SIEMENS SinuTrain

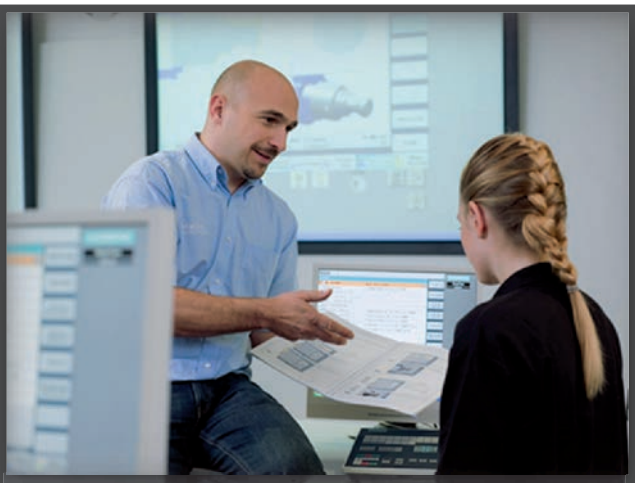

SinuTrain is a practically-orientated and comprehensive solution for CNC training – across all training levels. From the basics to the final qualification:
SinuTrain lets you efficiently teach the innovative functions of SINUMERIK CNC controls.

For effective training

SinuTrain Software makes training more effective while substantially improving cost efficiency.
In particular due to its excellent functionality and operational assurance, SinuTrain is appreciated by many training institutes as a top ranking solution for basic and on-going training.
More than 25,000 licences are currently in use

The advantages at a glance

- Convenient operation and CNC programming of SINUMERIK controls on your PC
- Suitable for all globally established CNC programming methods
- Realistic workpiece simulation with integrated virtual machine control panel
- Optimum machine adaptability for maximum CNC program compatibility
- Variety of operator languages available
- Intelligent software license management for all requirements and budgets
- Future-proof investment thanks to continuous updates since 1998

To make it easier for newcomers and trainees to learn the machine's functions, the computer-based training includes programming tasks that have to be worked through in various modules.

This means that trainees can familiarise themselves with details such as control, workspace and tool change in the best possible way.

Software *	Article no.
SIEMENS Sinutrain Shopturn	9001030
SIEMENS Sinutrain Shopmill	9001031

*Please quote the control software version with your order

Software*	Article no.
SIEMENS Sinutrain Shopturn & Shopmill	9001032
SINUMERIK 808D on PC free download on cnc4you	

SIEMENS ShopMill SinuTrain
Easier milling with ShopMill

ShopMill is a tailor made technology package for all standard CNC milling machines

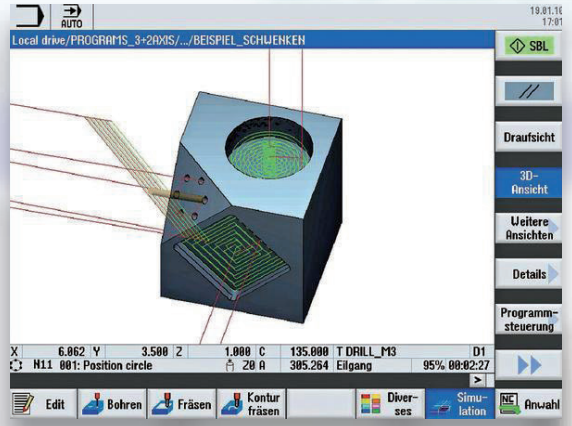

The focus for these machines is producing one-off parts and small batches. ShopMill offers simple control of the tool machine suitable for experienced staff.
All control operations are supported by graphical help images.
The manual mode functions support fast, practical machine setup for machining. This specifically includes determining the workpiece position in the machine and maintaining and measuring the tools used.

ShopMill offers two different programming tools for programming.

- The DIN/ISO editor is used to create DIN/ISO programs on the machine, and for correcting externally generated DIN/ISO programs.
- The work plan editor is used for graphical programming on the machine.

ShopMill thus offers a uniform control configuration which covers all globally required fields of application without retroactive commissioning overhead
:

- Intuitive user interface for all machine functions
- DIN/ISO programming on the machine or offline via CAD/CAM system
- Graphical programming
- Mould making applications
- Measuring functions

ShopMill - Highlights

- Flexible programming through graphical-interactive (without DIN/ISO knowledge) or text-based programming input with practically-orientated cycles - also for use in tool and mould making
- User-friendly control through practical setup and measuring functions, clear-cut tool management and 3D simulation
- Boost productivity with PC software support for work preparation without blocking the machine.

SIEMENS ShopTurn

SinuTrain
Easier turning with ShopTurn

ShopTurn - a control and programming software package - is characterised by its graphical program and work plan generation features

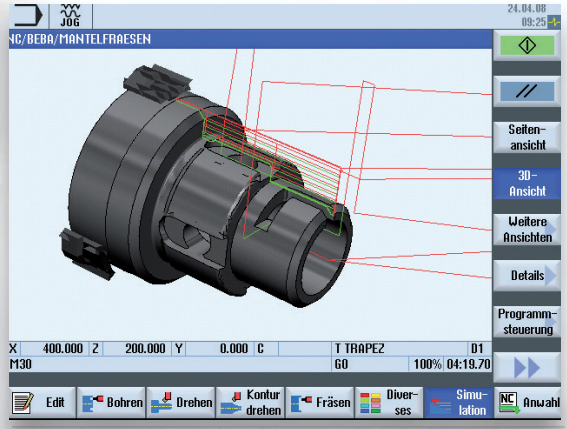

Machines are quickly set up with ShopTurn, and workpieces quickly measured. The ShopTurn control and programming software package is characterised by its graphical program and work plan generation features which help users to create a finished workpiece even without knowledge of DIN/ISO programming instructions.

A graphical overall view of the workpiece can be accessed from within the work plan at the push of a button. Thanks to this dynamic line graphic, programming errors can be identified and quickly remedied.
Highlights: simulation lets the user test any work plans they create. During the simulated run, the production time for the turned part is determined. This means that, when you receive a request for quotation and based on the drawing, you can program, simulate and additionally calculate the cost based on the production duration, all of which saves your customer time.

ShopTurn - Highlights

The following basic elements are available:
- Straight line X/Z, also with C axis
- Gradient in X/Z or with angle, also on C axis
- Circle parameterisable by reference to radius/end point or centre point

▶ Manual functions/setup functions
Measure workpiece > score workpiece on Z axis
Measure workpiece > Measure workpiece with Tooleye
Measure workpiece by scoring

▶ Additional options
- Easily understandable help images for each cycle
- Dimensionally accurate graphic for input support
- Graphical work plan test/test run
- Create/load and process complete DIN/ISO programs
- Possible to input the technology of the tool definition per work plan step
- Tool and wear data for up to 128 tools

-

▶ Automatic functions
- Block advance (also to individual holes in a drilling template)
- Block sequence (automatic operation)
- Work plan test (dry run)
- Re-approach contour
- Block search

▶ Other functions
- The ability to create the work plan step-by-step helps you characterise each step with easily understandable pictograms, – create work plans without DIN/ISO skills, easy editing, – insert and remove special instructions (e.g., M functions)
- Insert transition elements
- Processing block by block (single step)

SIEMENS SINUMERIK 808D

Offers smart CNC features such as full, servo-controlled tapping without a compensation chuck or switch over between a flying spindle and the C axis, for the most precise and fastest turning operations.

- Standard machines with up to 4 axes/spindles in a single machining channel
- Single machining channel
- Pulse/direction interface
- 7.5" LCD colour display
- SINUMERIK MDynamics

Excellent performance. Simply smart.

Compact and robust
Thanks to a panel-based CNC design with very few interfaces and an IP65 protected control panel, the SINUMERIK 808D is perfectly prepared for deployment in tough conditions. The small dimensions allow use on compact machines. At the same time, the SINUMERIK 808D offers convenient operation with short-stroke buttons and the familiar SINUMERIK soft keys.

Optimised for simple turning and milling applications
Thanks to technology-specific variants, the SINUMERIK 808D is perfectly preconfigured for turning and milling. The application spectrum covers everything from simple, standardised milling machines or simple machining centres, through cycle-controlled lathes, to simple full-CNC lathes.

Ideal for newcomers
Thanks to the innovative, integrated startGUIDE, the SINUMERIK 808D is the perfect partner for newcomers to the world of CNC. In addition to CNC operation and programming, commissioning is also explained graphically and interactively. The standardised SINUMERIK control and programming philosophy makes the SINUMERIK 808D the perfect entry-level choice for the world of SINUMERIK applications.

- **Simple, intuitive user interface**

thanks to dialogue-orientated user support with SINUMERIK Operate BASIC

- **Comprehensive range of technology cycles**

for turning and drilling with the graphical input masks in SINUMERIK programGUIDE BASIC

- **The machine control panel can be plugged in via USB "Plug&Play"**

and is equipped with ergonomic override switches just like high-end CNCs.

- **Great performance and precision**

thanks to state-of-the-art CNC functions

- **SINAMICS V60 SIMOTICS S-1FL5**

- 4 -10 Nm nominal torque
- 220 V drive input
- 200% overload
- Incremental transducer with 2,500 ppr
- Motor speed 2,000 rpm
- Degree of protection IP 54

OPTIMUM machines with SINUMERIK 808D


F 3


F 80


F 105


L 28HS


L 34HS


S 400E

SIEMENS

SINUMERIK 808D ADVANCED

The SINUMERIK 808D Advanced is a new CNC system for simple lathes and milling machines which closes the gap between the SINUMERIK 808D for entry-level machines and the SINUMERIK 828D Basic compact class

- Standard machines with up to 5 axes/ spindles for turning centers without a Y axis
- Single machining channel
- RJ45 Ethernet at the rear
- 7.5" LCD colour display
- No battery, continuous buffering of data based on NV RAM technology

Excellent performance. Simply smart.

Compact and robust
The SINUMERIK 808D ADVANCED is perfectly tailored for the requirements of state-of-the-art standard machines.
In combination with the SINAMICS V70 drive and SIMOTICS S-1FL6 motor, the SINUMERIK 808D ADVANCED guarantees excellent system performance. Communication between the CNC machine and the drive via a high-speed bus guarantees efficient positional control thus ensuring excellent precision and optimal cutting performance. The internationally leading CNC technology offers unrivalled performance potential for standard lathes and milling machines.
Thanks to the Advanced Surface function and the highly-dynamic SINAMICS V70 drive system, the SINUMERIK 808D ADVANCED M-System is also suitable for machining casting and mould building parts.

Auto Servo Tuning (AST)

The AST function gives users an easy option for optimising machines with the SINUMERIK 808D ADVANCED in the case of stricter dynamic and precision requirements, e.g., for casting and moulding building applications.

Safe Torque Off (STO) function

The STO function prevents unintended machine movements and is suitable, e.g., for safeguarding the machine's safety doors.

High-resultion tracking

SIMOTICS S-1FL6 motors support incremental transducers with up to 2,500 ppr and 20-bit absolute encoders that precisely measure the motor's current position. This guarantees a high level of precision and optimal surface quality of the finished workpiece.

SINAMICS V70 SIMOTICS S-1FL6

- 1.9 - 40 Nm nominal torque
- 400 V drive input
- 300% overload
- Incremental transducer with 2,500 ppr
- Motor speed 4,000 rpm
- Degree of protection IP 65

OPTIMUM machines with SINUMERIK 808D ADVANCED

F 105

L 34HS

S 400E

SIEMENS
SINUMERIK 828 D BASIC T

The all-round talent for standard lathes

- Panel-based compact CNC
- Single machining channel
- Up to 5 axes/spindles
- 8.4" LCD colour display
- S7-200 PLC

Warranty extension

Our extended warranty lets you protect your new machine against damage for a further 12, 24 or 36 months after the two-year SIEMENS warranty expires. (can only be ordered within the two-year SIEMENS warranty period)
Article no.
12 months; Article no. 9001014
24 months; Article no. 9001015
36 months; Article no. 9001016

With its unique CNC performance, the SINUMERIK 828D BASIC T sets standards for turning on standardised machines

Benefits

- Compact, robust and maintenance-free CNC control panel with dedicated system software for turning technology
- Maximum machining precision with 80-bit NANOFP accuracy
- New SINUMERIK Operate user interface throughout to the SINUMERIK 840D sl
- Smart kinematic transformations for turning and drilling on the face and sleeve of the workpiece
- ShopTurn: shortest programming time for creating one-off parts and small batches
- ProgramGUIDE: shortest machining time and maximum flexibility for creating mass produced parts
- Unique spectrum of technology cycles – from machining arbitrary turning and milling contours with residual material detection through to in-process measurement
- Animated Elements: unique control and programming support with animated visual sequences
- State-of-the-art data transmission via CompactFlash card, USB stick and factory network (Ethernet)
- Easy Message: maximum machine availability through process monitoring via text messages (SMS)

Function

- 2 control panel variants for horizontal and vertical control panel housings
- Integrated QWERTY CNC full keyboard with short-stroke keys
- CompactFlash card, USB and Ethernet interface on front of control panel
- Additional Ethernet interface on the rear of the CNC for wired factory network
- Integrated PLC based on SIMATIC S7-200 instruction set with contact plan programming (ladder steps)
- I/O interface based on PROFINET for connecting PLC peripherals and machine control panels
- Licensable CNC options
- Integrated tool management with tool service life monitoring
- Management of replacement tools (option)
- Integration of user images Easy Screen
- Integrated data archiving process for simple data updates
- Elimination of defects for 24 months as of second commissioning for all equipment components as per RSV performance description

SINAMICS S120

- The servo drive is the perfect basis for modular plant and machine solutions – thanks to its innovative system architecture and digital communication options
- Wide spectrum of control modes and close-to-drive technology features
- Integrated safety functions
- Rational engineering and fast commissioning thanks to tools SIZER (drive design) and STARTER (commissioning)
- Automatic configuration and autotuning of the control functions
- Low-overhead, well thought out solutions thanks to Totally Integrated Automation (TIA), pervasive SINAMICS to the automation level
- Integrated SINAMICS S120 web server
- Voltage and output range: 0.12 - 4,500 kW for connection voltages 1AC 230 V, 3AC 380 - 480 V, 3AC 500 - 690 V
- Open-/closed-loop control: V/f control vector control with/without transducer Servo control with/without transducer

OPTIMUM Maschinen with SINUMERIK 828D Basic T

L 44

L 440

L 460

L 500

L 520

S 600

SIEMENS SINUMERIK 828D

With its unique CNC performance, the SINUMERIK 828D sets standards for milling on standardised machines

- Panel-based compact CNC
- Technologies: Milling
- Up to 8 axes/spindles
- Single machining channel
- 10.4" colour display
- S7-200 PLC

Warranty extension

Our extended warranty lets you protect your new machine against damage for a further 12, 24 or 36 months after the two-year SIEMENS warranty expires. (can only be ordered within the two-year SIEMENS warranty period)

Article no.
12 months; Article no. 9001014
24 months; Article no. 9001015
36 months; Article no. 9001016

The power house in the compact class!

Rugged and maintenance-free
Control panel front made of pressure cast magnesium, the panel-based CNC design with a low number of interfaces and a high degree of protection make the SINUMERIK 828 controls a reliable partner, even in challenging environments. The fanless design without a hard disc and the NV RAM memory technology without a buffer battery make the SINUMERIK 828D a totally maintenance-free CNC control.

Standardised turning and milling
With its technology-specific system software, the SINUMERIK 828D ideally adapts to suit standardised lathes and milling machines. The range of applications extends from vertical and simple horizontal machining centres – also for mould making applications, of course – through to turning centres with counter spindle, driven tools and a Y axis

User-friendly
The SINUMERIK 828D is easy to use thanks to a full QWERTY CNC keyboard with short-stroke keys and a high-resolution 8.4"/10.4" TFT colour display. With USB, CF card and RJ45 interfaces on the front of the control panel, you can transfer CNC data easily and quickly.

Simple programming
- ShopMill / ShopTurn - shortest programming times for one-off parts and small batches
- ProgramGUIDE- shortest program running times and maximum flexibility for large batches
- ISO dialect – optimal CNC program compatibility

Simply ingenious
Animated Elements - unique, graphical visualisation
- Integrated online help - fast, topic-driven help
- Easy Message – transfer the machine status via text message (SMS)

SINAMICS S120

- The servo drive is the perfect basis for modular plant and machine solutions – thanks to its innovative system architecture and digital communication options
- Wide spectrum of control modes and close-to-drive technology features
- Integrated safety functions
- Rational engineering and fast commissioning thanks to tools SIZER (drive design) and STARTER (commissioning)
- Automatic configuration and autotuning of the control functions
- Low-overhead, well thought out solutions thanks to Totally Integrated Automation (TIA), pervasive SINAMICS to the automation level
- Integrated SINAMICS S120 web server
- Voltage and output range: 0.12 - 4,500 kW for connection voltages 1AC 230 V, 3AC 380 - 480 V, 3AC 500 - 690 V
- Open-/closed-loop control: V/f control vector control with/without transducer Servo control with/without transducer

OPTIMUM machines with SINUMERIK 828D


F 150

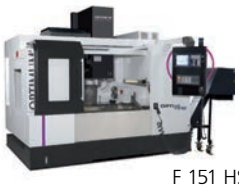
F 151 HSC


F 211 HSC


F 310


F 410


S 500


S 750

SIEMENS SINUMERIK 840D sl

The SINUMERIK 840D sl is rightly regarded as the benchmark in the CNC premium class. Maximum CNC performance and unrivalled flexibility and openness are the basis for virtually any machine solution.

- Drive-based modular CNC
- Multiple technology CNC
- Up to 93 axes/spindles
- Up to 30 machining channels
- Modular panel design
- Up to 19" colour display
- SIMATIC S7-300 PLC

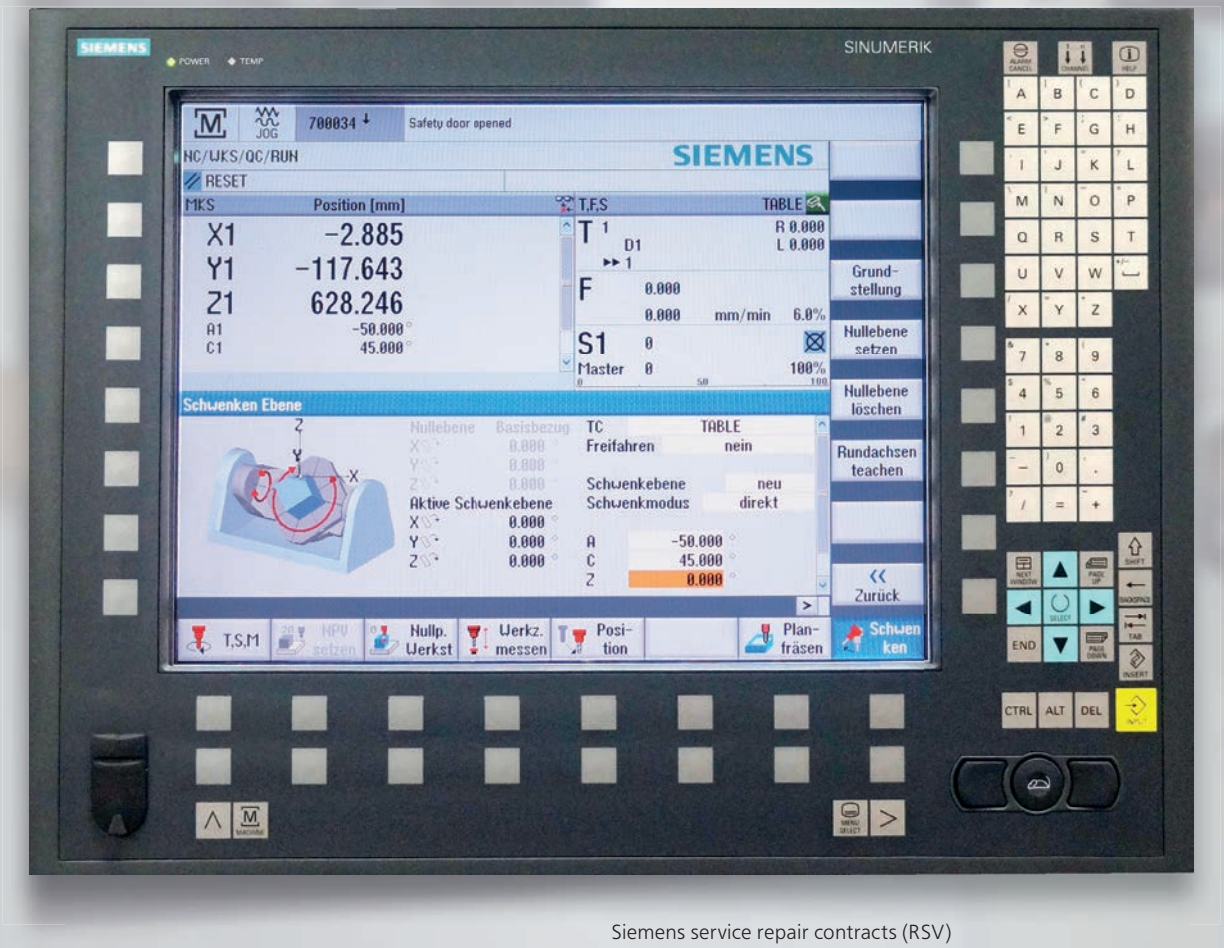

Siemens service repair contracts (RSV)

This warranty (RSV) lets you protect your new machine against warranty damage for 12, 24 or 36 months..

12 months; Article no 9001020 to 4 axes
24 months; Article no 9001021 to 4 axes
36 months; Article no 9001022 to 4 axes

12 months; Article no 9001017 for 5 and 6 axes
24 months; Article no 9001018 for 5 and 6 axes
36 months; Article no 9001019 for 5 and 6 axes

Ultimate performance in the premium class

Compact and robust
With maximum CNC performance and flexibility and openness that are unrivalled on the market, the SINUMERIK 840Dsl is the basis for virtually any machine solution. Powerful hardware architecture and smart control algorithms, as well as premium drive and motor technology ensure maximum dynamic and precision in machining.

The SINUMERIK 840D sl CNC is supplemented by a comprehensive range of solutions for IT integration. Thanks to these innovative, forward looking solutions, SIEMENS Machine Tool Systems ensures maximum productivity and availability

The right solution for any engineering challenge
With its SINUMERIK 840D sl premium CNC, SIEMENS Machine Tool Systems covers all major technologies on the tool machine market. At the same time, the SINUMERIK 840D sl sets standards in merging various technologies to create multi-tasking solutions

Modular and scalable
In addition to scalable NCU performance, the SINUMERIK 840D sl also offers a high degree of modularity in its operating components. With a flexible M:N operator concept – e.g., the combination of arbitrary control panels with the NCU – the SINUMERIK 840D sl ideally adapts to the control philosophy of state-of-the-art of premium machine solutions.

Benchmark in Open Architecture
The SINUMERIK 840D sl offers unrivalled system openness. The CNC can thus be optimally adapted to the machine technology and offers a high degree of freedom in manufacturing automation.

Communicative at all levels
Thanks to PROFINET, the SINUMERIK 840D sl integrates perfectly with the SIEMENS TIA universe. Totally Integrated Automation stands for unique pervasiveness – from the field level through production to enterprise management.

SINAMICS S120

- The servo drive is the perfect basis for modular plant and machine solutions – thanks to its innovative system architecture and digital communication options
- Wide spectrum of control modes and close-to-drive technology features
- Integrated safety functions
- Rational engineering and fast commissioning thanks to tools SIZER (drive design) and STARTER (commissioning)
- Automatic configuration and autotuning of the control functions
- Low-overhead, well thought out solutions thanks to Totally Integrated Automation (TIA), pervasive SINAMICS to the automation level
- Integrated SINAMICS S120 web server
- Voltage and output range: 0.12 - 4,500 kW for connection voltages 1 AC 230 V, 3 AC 380 - 480 V, 3 AC 500 - 690 V
- Open-/closed-loop control: V/f control vector control with/without transducer Servo control with/without transducer

OPTIMUM machines with SINUMERIK 840D sl

F 311HSC

F 411HSC

SIEMENS SINUMERIK OP 015 / OP 019 black

NEW

The Sinumerik black line panels OP 015 black and OP 019 black see the Siemens Drive Technologies division present a new generation of control panels for the Sinumerik 840D sl CNC, thus opening up new machine operation opportunities.

SINUMERIK OP 015 black

Display
- 16.5" diagonal industrial display
- Little programming on the machine

SINUMERIK OP 019 black

Display
- 18.5" diagonal industrial display
- Mainly programming on the machine

Siemens service repair contracts (RSV)

This warranty (RSV) lets you protect your new machine against warranty damage for 12, 24 or 36 months..

12 months; Article no 9001020 to 4 axes
24 months; Article no 9001021 to 4 axes
36 months; Article no 9001022 to 4 axes

12 months; Article no 9001017 for 5 and 6 axes
24 months; Article no 9001018 for 5 and 6 axes
36 months; Article no 9001019 for 5 and 6 axes

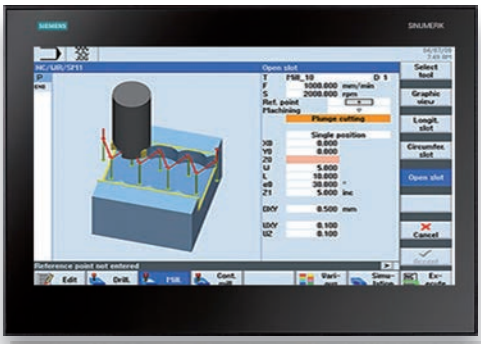

New generation of control panels

The new SINUMERIK Multitouch control panel for high-end CNC applications

The Sinumerik black line panels OP 015 black and OP 019 black see the Siemens Machine Tool Systems division present a new generation of control panels for the Sinumerik 840D sl CNC, thus opening up new machine operation opportunities. The two operator panels are characterised by a state-of-the-art Multitouch screen interface that makes the experience of operating, monitoring and programming our CNC lathes even more user-friendly. Thanks to capacitive sensors, rapid interaction with the user interface is even possible when wearing gloves during operation. Unintended input, caused for example, by resting the ball of the thumb on the panel, is thus avoided.

The functions of the SINUMERIK Operate 4.7 Service Pack 2 were specially optimised to give the user a touch control option for operating the machine.

Display
- Resolution: 1366 x 768 pixels (wide-screen format)

Connections
- 3 x USB 2.0 (at back)
- Industrial Ethernet

Maximum operating comfort:
- Capacitive multitouch technology (up to 5 contacts simultaneously)
- High resolution, wide-screen monitor for convenient operation and monitoring

Robust
- No wear of mechanical components thanks to multitouch technology
- Scratch-proof glass front

Typical applications
- Degree of protection IP65/IP66
- A USB extension is available for the front-side USB 2.0 connection for installation in control desks

More properties
- Measuring and logging
- Multiple clamping (the tool change is optimised so that the currently changed in tool is first used to complete all operations in all settings before changing the next tool into the spindle)

Mould-making quick view
- provides a realistic surface visualisation for all relevant interpolation types for freeform surfaces

smartOperate
- smart gesture control via touch panels
- smart scroll function
- Fast and convenient ZOOM functions
- Fast and convenient access to CNC parameters

SINUMERIK MDynamics
- **Advanced Surface** - surfaces smooth as glass

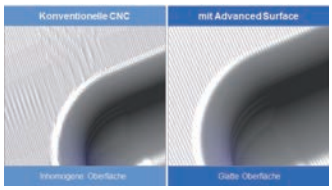

- Optimal protection against undesirable collisions
  Collision avoidance supports 3D collision monitoring in real time for all operating modes (JOG, MDA and AUTOMATIC)
- DXF reader for paperless production
  Kinematic transformations
- High-speed settings
- **OPTION Top Surface**: On top of the benefits provided by Advanced Surface, Top Surface offers further improvements in terms of surface quality, processing speed and user-friendliness – especially in the case of poor data quality of the CNC programs provided by the CAD/CAM systems

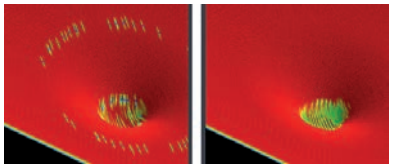

SINUMERIK Integrate Run MyRobot/Handling
- Run MyRobot/Handling supports the integration of handling robots in tool machines with the greatest possible degree of user-friendliness. CNC personnel operate and program the handling robot on the tool machine.

OPTIMUM machines with SINUMERIK OP 015 / 019 black

F 311 HSC

F 411 HSC

FU 5

STARTER SET VDI 30

Starter set	VDI 30
Article no.	3536115

Comprising:
3 pcs. square transverse mount
1 pc. square transverse overhead mount
1 pc. square longitudinal mount
5 pcs. drill rod holder Ø 10 / 12 / 16 / 20 / 25 mm
3 pcs. cap
1 pc. spring collet holder ER 25
1 pc. spring collet spanner ER 25
15-part spring collet set ER 25
1 pc. tool holder
1 pc. chuck

Square transverse mount	3536231
· Right-hand type, short	
· DIN 69880	
· Large adjustable conical tipped nozzle	

Square transverse mount	3536232
· For overhead work	
· Right-hand type, short	
· DIN 69880	
· Large adjustable conical tipped nozzle	

Square longitudinal mount	3536233
· Right-hand type	
· Large adjustable conical tipped nozzle	

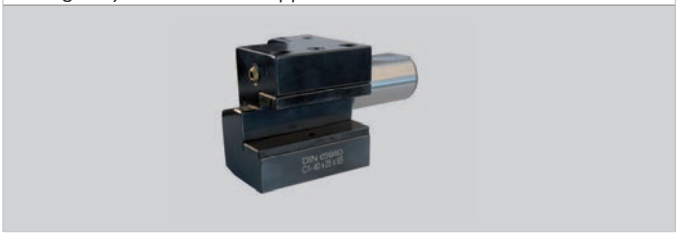

Cap	3536236
· Protects the tool changer against soiling	

Spring collet holder ER 25	3536237

Spring collet key ER 25	3536240

Spring collet set ER 25	3441109
· 15 pcs.; sizes Ø 1 - 16 mm	

Tool holder	3536238
· Pre-worked	
· Round blank	

Chuck	3536239
· Clamping range 1 - 13 mm	

Drill rod holder	
Ø 10 mm	3536241
Ø 12 mm	3536242
Ø 16 mm	3536243
Ø 20 mm	3536244
Ø 25 mm	3536245

STARTER SET VDI 40

Starter set	VDI 40
Article no.	3536116

Comprising:
3 pcs. square transverse mount
1 pc. square transverse overhead mount
1 pc. square longitudinal mount
5 pcs. drill rod holder Ø 10 / 12 / 16 / 20 / 25 mm
3 pcs. cap
1 pc. spring collet holder ER 25
1 pc. spring collet spanner ER 25
15-part spring collet set ER 25
1 pc. tool holder
1 pc. chuck

Square transverse mount	3536251
· Right-hand type, short	
· DIN 69880	
· Large adjustable conical tipped nozzle	

Square transverse mount	3536252
· For overhead work	
· Right-hand type, short	
· DIN 69880	
· Large adjustable conical tipped nozzle	

Square longitudinal mount	3536253
· Right-hand type	
· Large adjustable conical tipped nozzle	

Cap	3536256
· Protects the tool changer against soiling	

Spring collet holder ER 25	3536257

Spring collet key ER 25	3536260

Spring collet set ER 25	3441109
· 15 pcs.; sizes Ø 1 - 16 mm	

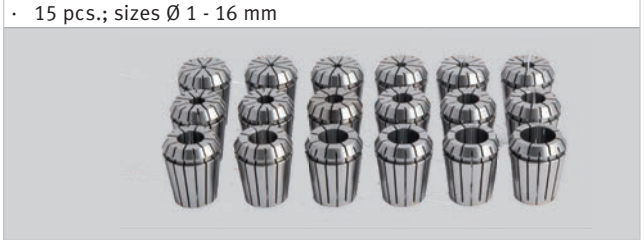

Tool holder	3536258
· Pre-worked	
· Round blank	

Chuck	3536259
· Clamping range 1 - 13 mm	

Drill rod holder	
Ø 10 mm	3536261
Ø 12 mm	3536262
Ø 16 mm	3536263
Ø 20 mm	3536264
Ø 25 mm	3536265

STARTER SET BT 30

Starter set	BT 30
Article no.	3536107

Comprising:
1 pc. milling head holder
1 pc. chuck
2 pcs. Weldon 6 mm
1 pc. Weldon 8 mm
1 pc. Weldon 10 mm
1 pc. Weldon 12 mm
1 pc. Weldon 16 mm
2 pcs. Weldon 20 mm
1 pc. adapter BT 30
3 pcs. spring collet holder ER 32
1 pc. spring collet spanner ER 32
18-part spring collet set ER 32
1 pc. height adjuster
1 pc. assembly and tool adjustment gauge
14 pcs. pull studs
1 pc. taper squeegee

Milling head holder 3536306

- Collet 22 mm

Chuck 3536303

- Clamping range 1 - 13 mm

Weldon holder	
Ø 6 mm	3536310
Ø 8 mm	3536311
Ø 10 mm	3536312
Ø 12 mm	3536313
Ø 16 mm	3536314
Ø 20 mm	3536315

Adapter 3536305

- BT 30 to MK 2

Spring collet holder ER 32 3536304

Spring collet holder spanner ER 32 3536307

Spring collet set ER 32 3441122

- 18-part spring collet set sizes Ø 1 - 16 mm

Height-adjuster 3536290

- Analogue version
- For fast and easy determination of the reference point on the Z axis and/or for adjusting tools "to zero" (e.g., for milling or drilling) without damaging the workpiece
- Housing height 50 mm

Assembly and tool adjustment gauge 3536193

- For easy and precise adjustment of tools
- Vertical and horizontal collet for tools with a steep-angle taper

Taper squeegee 3536301

Pull stud 3536302

STARTER SET BT40 / SET 1

Starter set	BT40 / Set 1
Article no.	3536105

Comprising:

- 1 pc. height adjuster
- 18-part parallel shim set
- 1 pc. assembly and tool adjustment gauge
- 1 pc. milling chuck BT 40 SLA 20-90
- 1 pc. quick-release drill chuck 1 - 13 mm
- 2 pcs. spring collet holder BT 40/ER 32
- 18-part spring collet set ER 32, 3 - 20 mm
- 1 pc. adapter morse taper BT 40 - MK 3
- 1 pc. face milling mount BT 40
- 1 pc. face miller
- 6 pcs. pull studs
- 1 pc. tray

Height-adjuster — 3536180

- Analogue version
- Housing height 50 mm

Parallel shim set — 3536191

- Finely polished to 0.01 mm precision
- Length 150 mm x width 8.5 mm
- 18 pcs. sizes 2 x 14 mm/2 x 16 mm/2 x 20 mm/2 x 24 mm/ 2 x 30 mm/2 x 32 mm/2 x 36 mm/2 x 40 mm/2 x 44 mm

Assembly and tool adjustment gauge — 3536187

- For easy and precise adjustment of tools
- Vertical and horizontal collet for tools with a steep-angle taper shank
- Weight 13 kg

Milling chuck BT 40 SLA 20-90 — 3536186

- For holding the 3-D probe

Quick-action drill chuck 0 - 13 mm - BT 40 — 3536183

- Includes hook wrench for locking

Spring collet holder BT 40/ER 32 — 3536182

- Precision 0.005 mm

Spring collet set ER 32 — 3441122

- 18 spring collets 3 - 20 mm

Adapter morse taper BT 40 - MK 3 — 3536184

Face milling mount BT 40 (27 mm) — 3536190

Face-milling cutter — 3536189

- 63 mm · bore 27 mm · includes cutting inserts

Replacement cutting inserts — 3530196

- 10 pcs.

Pull stud	
BT 40 - 40 x 45°	3536185
SK 40 M16	3536179

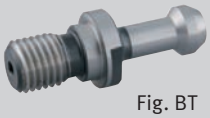

Fig. BT

Fig. SK

Milling head holder — 3536306

- Collet 22 mm

Tray for BT 40 tools — 3536188

- Dimensions L x W x H: 595 x 143 x 225 mm

STARTER SET BT40 / SET 2

Starter set	BT40 / Set 2
Article no.	3536108

Comprising:

- 1 pc. milling head holder with 27 mm collet
- 1 pc. quick-release drill chuck 1 - 13 mm
- 2 pcs. Weldon 6 mm
- 1 pc. Weldon 8 mm
- 1 pc. Weldon 10 mm
- 1 pc. Weldon 12 mm
- 1 pc. Weldon 16 mm
- 2 pcs. Weldon 20 mm
- 1 pc. adapter BT 40 to MK 3
- 3 pcs. spring collet holder ER 32
- 1 pc. spring collet spanner ER 32
- 18-part spring collet set ER 32
- 1 pc. height adjuster
- 1 pc. assembly and tool adjustment gauge
- 1 pc. taper squeegee
- 15 pcs. pull studs

Milling head holder 3536336

- Collet 27 mm

Chuck 3536333

- Clamping range 1 - 13 mm

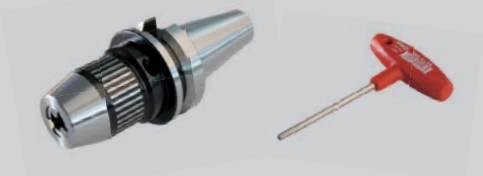

Weldon holder	
Ø 6 mm	3536340
Ø 8 mm	3536341
Ø 10 mm	3536342
Ø 12 mm	3536343
Ø 16 mm	3536344
Ø 20 mm	3536345

Adapter 3536335

- BT 40 to MK 3

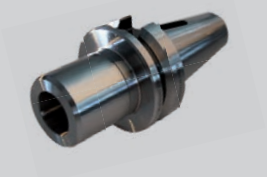

Spring collet holder ER 32 3536334

Spring collet holder spanner ER 32 3536307

Spring collet set ER 32 3441122

- 18 spring collets; sizes Ø 1 - 16 mm

Height-adjuster 3536290

- Analogue version
- For fast and easy determination of the reference point on the Z axis and/or for adjusting tools "to zero" (e.g., for milling or drilling) without damaging the workpiece
- Housing height 50 mm

Assembly and tool adjustment gauge 3536194

- For easy and precise adjustment of tools
- Vertical and horizontal collet for tools with a steep-angle taper

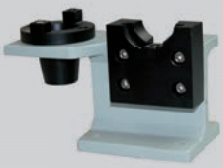

Taper squeegee 3536331

Pull stud 3536332

STARTER SET SK40/DIN 69871

Starter set	SK 40 / DIN 69871
Article no.	3536109

Comprising:

- 1 pc. milling head holder with 27 mm collet
- 1 pc. chuck 1 - 13 mm
- 2 pcs. Weldon 6 mm
- 1 pc. Weldon 8 mm
- 1 pc. Weldon 10 mm
- 1 pc. Weldon 12 mm
- 1 pc. Weldon 16 mm
- 2 pcs. Weldon 20 mm
- 1 pc. adapter SK 40 to MK 3
- 3 pcs. spring collet holder ER 32
- 1 pc. spring collet spanner ER 32
- 18-part spring collet set ER 32
- 1 pc. height adjuster
- 1 pc. assembly and tool adjustment gauge
- 1 pc. taper squeegee
- 15 pcs. pull studs

Milling head holder 3536366

- Collet 27 mm

Chuck 3536363

- Clamping range 1 - 13 mm

Weldon holder	
Ø 6 mm	3536370
Ø 8 mm	3536371
Ø 10 mm	3536372
Ø 12 mm	3536373
Ø 16 mm	3536374
Ø 20 mm	3536375

Adapter 3536365

- SK40 to MK 3

Spring collet holder ER 32 3536364

Spring collet holder spanner ER 32 3536307

Spring collet set ER 32 3441122

- 18 spring collets; sizes Ø 1 - 16 mm

Height-adjuster 3536290

- Analogue version
- For fast and easy determination of the reference point on the Z axis and/or for adjusting tools "to zero" (e.g., for milling or drilling) without damaging the workpiece
- Housing height 50 mm

Assembly and tool adjustment gauge 3536195

- For easy and precise adjustment of tools
- Vertical and horizontal collet for tools with a steep-angle taper

Taper squeegee 3536331

Pull stud 3536362

STARTER SET HSK A-63

Starter set	HSK A-63
Article no.	3536110

Comprising:
1 pc. milling head holder with 27 mm collet
1 pc. chuck 1 - 13 mm
1 pc. Weldon 6 mm
1 pc. Weldon 8 mm
1 pc. Weldon 10 mm
1 pc. Weldon 12 mm
1 pc. Weldon 16 mm
1 pc. Weldon 20 mm
1 pc. adapter HSK63 to MK 3
1 pc. spring collet holder ER 32
18-part spring collet set ER 32
1 pc. spring collet spanner ER 32
1 pc. assembly block swivelling
1 pc. taper squeegee

Milling head holder 3536414

- Collet 27 mm

Chuck 3536411

- Excellent precision and concentricity
- Secure clamping of the workpiece thanks to mechanical clamping force booster
- Avoids autonomous release of clamp while machining clockwise or anti-clockwise and in case of spindle stop

Weldon holder

- For clamping tools with a lateral carrier
- Extremely smooth action

Ø 6 mm	3536450
Ø 8 mm	3536451
Ø 10 mm	3536452
Ø 12 mm	3536453
Ø 16 mm	3536454
Ø 20 mm	3536455

Spring collet holder ER 32 3536412

- For clamping tools with a cylindrical shank in ER spring collets
- Clamping range 0.5 - 10 mm

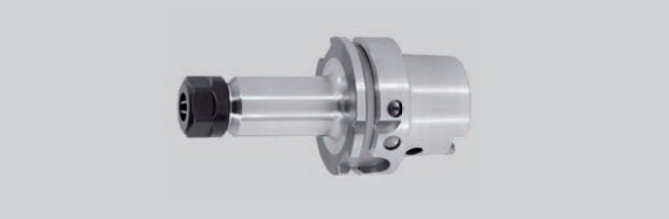

Spring collet holder spanner ER 32 3536307

Adapter 3536413

- SK40 to MK 3
- Ground to precisely match helix gradient on inside and outside

Spring collet set ER 32 3441122

- 18 spring collets; sizes Ø 1 - 16 mm

Assembly block 3536415

- For easy and precise adjustment of tools
- Swivelling

Taper squeegee 3536410

- For cleaning the machine taper to remove dust, chips and soiling
- Non-woven border

RENISHAW PRIMO SET

NEW

Renishaw Primo Set	9001034
· with collet BT 30	

Renishaw Primo Set	9001035
· with collet BT 40	

PRIMO CREDIT TOKEN	9001060
· 6 months	
· System protection	

PRIMO CREDIT TOKEN	9001062
· temporally unrestricted use	

Scope of delivery: Renishaw Primo Set
· Tool measuring probe Radio Part Setter
· Tool measuring probe Radio 3D Tool Setter
· Primo Interface
· GoProbe Software
· License for six months

Primo™ Radio Part Setter

The Primo Radio Part Setter (tool measuring probe) is a measuring probe that switches on touching for automatic tool measurement. It determines the exact position of a workpiece so that the machining program can be adapted accordingly.

Using the probe offers a number of benefits:
- ▶ Reduction of workpiece setup time by up to 90% compared with a manual approach
- ▶ Tool zero point translations are automatically updated
- ▶ Eliminates manual errors and deviations during workpiece setup
- ▶ Less scrap and reworking of materials
- ▶ Lower machining tool costs

These benefits save you money and give you more time to produce the workpiece on your machine.

Primo™ Radio 3D Tool Setter

The Primo Radio 3D Tool Setter (tool measuring probe) is fastened on the tool machine table and used for precise longitudinal and diameter measurement of cutting tools to improve production precision. Using the tool measuring probe offers a number of benefits:
- ▶ Reduction of tool adjustment time by up to 90% compared with a manual approach
- ▶ Automatic updating of tool corrections
- ▶ Detecting tool breaks
- ▶ Eliminates manual errors and deviations during tool adjustment
- ▶ Reducing scrap and reworking of materials

Primo™ Interface?

The interface is used for communication between the Primo System and the tool machine controller. It saves the Primo System's credit information. A display on the front panel shows the residual credit as a number of days as well as system status information.

How does the Primo Interface work?
When the workpiece or workpiece probe switches, a wireless signal is transmitted via the interface to the CNC controller. The machine position is recorded and used to compute the workpiece position or size of the measured workpiece.
The Primo System uses Renishaw's patented Frequency-hopping spread spectrum (FHSS) technology for signal transmission; this compensates for the effect of interference by other wireless frequencies and electronic noise sources that frequently occur in a tool machine's environment.

GoProbe Software

GoProbe Software, a simple and complete measuring solution for workpiece and tool measurement based on single-line commands. The GoProbe training kit is a comprehensive self-study package which helps you program a variety of program sequences with the GoProbe software:

- ▶ Ensures operational readiness of the system
- ▶ Workpiece measurement
- ▶ Tool measurement
- ▶ Measuring and verification of workpiece materials

Additionally, a GoProbe App is available for your smartphone. Using the interactive app, you simply select the workpiece features and the required variables to generate your single-line command.

Rotoclear® S3

NEW

Product
- Clear vision during production process, any time and under toughest conditions. Approved system to keep inspection window clean and thus ensure continuous control of work flow. Suitable for any kind of CNC lathe or metal cutting machine as well as any machining centre or test station.

Installation
- The system is installed on the inside either by means of a bolt flange after cutting a hole the size of the rotating disc into the machining centre window, or, simply, without perforation, by affixing Rotoclear® S3 with a special adhesive. A specially developed and safe gluing process allows even unskilled personnel to reliably apply this method of installation by following a short and easily to understand step-to-step instruction. Rotoclear® S3 can either be installed in original equipment manufacturer machines (OEM), or, later, as a retrofit package. For milling machines the bolt flange version (polycarbonate glass) is recommended, for turning centres the adhesive version (laminated safety glass VSG) is deemed suitable.

Principle
- A rotating disc flings off striking coolants and cuttings, whether water-soluble or water-insoluble. This enables the operator to always have a clear view into the processing area – safety according to safety instructions currently effective being guaranteed.

Advantages
- Lowest installation depth (34 mm)
- Maximum field of vision by revolutionary drive concept
- Modest design
- Considerably reduced maintenance and cleaning intervals: Replacement of worn out rotating disc with one screw only in less than one minute without dismounting the entire device
- Simple mounting of the system either as bolt flange or adhesive version
- Maximum operational reliability by integrated sealing air supply
- Minimum power consumption by use of linear drive technology
- High torque for application under toughest conditions

Rotoclear S3K	9001095
· Bolted Version	
· 1 x Rotoclear® S3 basic_460	
· 1 x Bolt flange (6-17mm disc)	
· 1 x Positioning pattern, perforated	
· 1 x Protective tube 1.6 m	
· 1 x Pneumatic tube 8.5 m	
· 1 x Cable 2x0.75mm², coated, 10m	
· 1 x Adaptor electro-pneumatic (tube)	
· 1 x Tube fitting	
· 2 x Screw joint protection tube	
· 1 x Port connection 90°	

Rotoclear S3K	9001096
· Adhesive Version	
· 1 x Rotoclear® basic_460	
· 1 x Adhesive flange with cover	
· 1 x Two-component adhesive (flange), 50ml	
· 1 x Dosing gun (adhesive)	
· 1 x Positioning pattern, perforated	
· 1 x Protective tube 1.6 m	
· 1 x Pneumatic tube 8.5 m	
· 1 x Cable 2x0.75mm², coated, 10m	
· 1 x Adaptor electro-pneumatic (tube)	
· 1 x Tube fitting	
· 2 x Screw joint protection tube	
· 1 x Port connection 90°	
· 1 x Primer for polycarbonate discs, 25ml	
· 1 x Primer pad	
· 1 x Bonding instruction	

NEW

Automatic Bar Puller Grippex II

Made in Germany

Benefits and main features of the GRIPPEX bar puller

- Instant setup - gripping is secured without any adjustment within the whole gripping range.
- Compact and light - Adjacent turret tool positions do not need to be vacated
- Powerful - withstands high pressure - 20 bar. No need for a pressure reduction valve
- Works from 0.5 bar upward
- Clamps very close to the chuck, allowing for short overhang of the bar.
- Clamps with 3 legs - thus ensuring trouble-free handling of hexagonal bars at any angle to the spindle.
- Equipped with robot grabs, the device can also be used as a workpiece grab.

Functional principle

- The bar puller is actuated by the coolant pressure of the CNC lathe. The grab closes for coolant ON and opens for coolant OFF.
- The device is mounted on a tool holder with a coolant supply or directly on a VDI turret.
- A valve (screw on the housing for releasing) allows for fast opening of the grab if the cooling system has a non-return valve that delays the pressure drop at the grab
- A matching guide tube in the spindle is essential, not only to avoid vibration during turning, but also to rule out an extreme slant of the bar on pulling out.

Programming example

- Call the position of the turret with bar puller
- Move the grab to the grabbing position at the bar.
- Coolant ON to grab the bar.
- Release the spring collet or collet chuck
- Pull out the bar to the programmed Z position with a programmed feed
- Clamp the spring collet or collet chuck
- Coolant OFF to release the bar
- Approach the tool changing point and retrieve the first tool

Automatic Bar Puller Grippex II	VDI 30
Gripping range 2-60 mm	9001200
Gripping range 3-80 mm	9001201
Gripping range 7-105 mm	9001202

Automatic Bar Puller Grippex II	VDI 40
Gripping range 2-60 mm	9001203
Gripping range 3-80 mm	9001204
Gripping range 7-105 mm	9001205

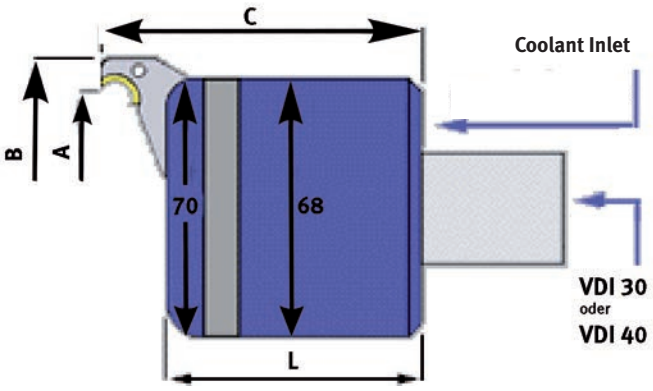

Gripping range	A	B	C
2-60 mm	64 mm	83 mm	89 mm
3-80 mm	83 mm	102 mm	94 mm
7-105 mm	110 mm	129 mm	108 mm
Staight shank	Directly fitted on the back plate		**L:** 71 mm
VDI 30	Back plate VDI (**L** + 11,80 mm)		82,80 mm
VDI 40	Back plate VDI (**L** + 12,80 mm)		83,80 mm

Haimer Universal 3D-Taster

NEW

Main Features
· For precise positioning of the spindle axis on the workpiece or device edges
· Measuring precision of 0.01 mm
· The Sensor is waterproof according to IP 67.

The product

- The Universal 3D-Sensor is a very precise and versatile measuring instrument for milling and EDM machines (insulated probe).
- The 3D-Sensor is clamped into a tool holder and inserted into a milling spindle. Once clamped into the machine spindle, the run-out (T.I.R) is fully adjustable to Zero. Then, you are able to find exact positioning of the spindle axis on the edges of the workpiece. This allows for zeros to be set and the length to be measured quickly and easily
- You may approach in any direction (X-, Y-, Z- axis – hence the name „3D-Sensor“). When the dial gage shows zero, the spindle axis is exactly on the workpiece edge.
- Only the HAIMER 3D-Sensor allows for the edge to be found on the first attempt. No calculating of the probe’s ball diameter is necessary – just Zero it out! Problems with mathematics or calculations are eliminated, allowing for fewer operator errors. Our 3D-Sensor is quick and easy, reducing the extra time needed with most edge-finders, increasing the productivity and accuracy of the operator.
- Simply bring the needle to Zero, and that is your edge with any probe. The accuracy is such that you are able to inspect your parts right on the machine. Tram vises, find the center of your bore, find your edge and inspect parts - it is all possible with the HAIMER 3D-Sensor. The unit has a large overrun distance in connection with the fully tested preset breaking points giving the sensor long life. All Universal 3D-Sensors are individually tested and adjusted when being assembled in order to achieve a maximum of measuring precision
- The Sensor is waterproof according to IP 67.

Universal 3D-Sensor	9001065
Including short probe tip Ø 4 mm	

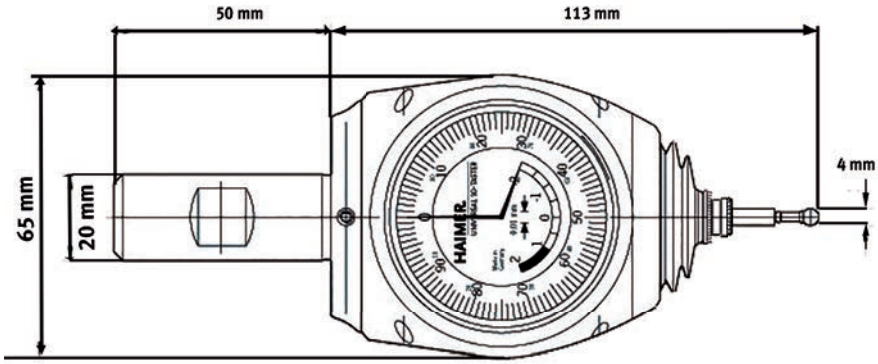

Modular machine vice

- Modular machine vice with high precision and repetition accuracy for series production and single-part machining on CNC milling machines and machining centres
- Robust design for milling
- Modular machine vice made completely of NiCrMo steel with hardness HRC60, tolerance 0.0015 mm
- Mobile jaws with extra long guides to prevent lift-off and slingshot risk
- Guide surfaces tempered and polished
- Large clamping range due to lock bolts with various hole spacings
- Long service life thanks to high quality
- Includes spanner
- Model MVSP with fixed jaws
- Model MVMP with pull-down jaws

MVSP 150x200	3530104
MVSP 150x300	3530108
MVSP 150x400	3530110
MVSP 175x300	3530114
MVMP 150x300	3530138

MADE IN EU

NEW

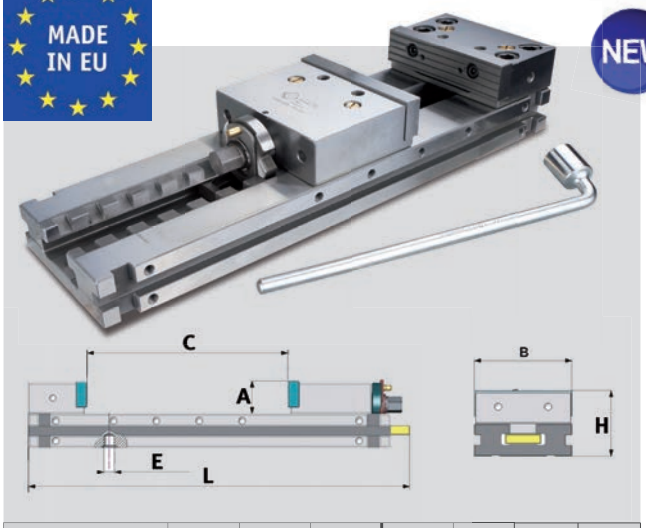

Tech. data		A	C	E	L	B	H	kg
MVSP 150x200	mm	50	205	16	480	149	100	34
MVSP 150x300	mm	50	305	16	580	149	100	38,6
MVSP 150x400	mm	50	405	16	680	149	100	45
MVSP 175x300	mm	50	505	16	780	149	100	51,5
MVMP 150x200	mm	60	305	16	636	174	118	58,5

Accessories

Clamping jaw set 150 mm - smooth for MVSP	3530216
Clamping jaw set 175 mm - smooth for MVSP	3530217
Clamping jaw set 150 mm - smooth for MVMP	3530256

Clamping jaw set 150 mm - knurled for MVSP	3530231
Clamping jaw set 175 mm - knurled for MVSP	3530232
Clamping jaw set 175 mm - knurled for MVSP	3530271

Side clamping block (2 pcs.) **150 mm** - soft	3530406
Side clamping block (2 pcs.) **175 mm** - soft	3530407

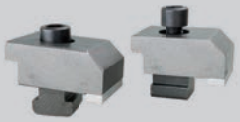

T-slot nuts (2 pcs.) Ø 12 mm	3530390
T-slot nuts (2 pcs.) Ø 14 mm	3530391
T-slot nuts (2 pcs.) Ø 16 mm	3530392
T-slot nuts (2 pcs.) Ø 18 mm	3530393

T-slot nuts (2 pcs.) Ø 12 mm cylindrical	3530380
T-slot nuts (2 pcs.) Ø 14 mm cylindrical	3530381
T-slot nuts (2 pcs.) Ø 16 mm cylindrical	3530382
T-slot nuts (2 pcs.) Ø 18 mm cylindrical	3530383

A	mm	12	14	16	18

Intermediate jaws 150 mm - mobile	3530351
Intermediate jaw 175 mm - mobile	3530352

- For parallel workpieces

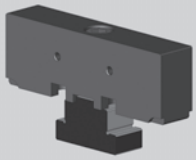

		A	B	C
150	mm	149	30	50
175	mm	174	30	60

Clamping jaw set 150 mm for extending the clamping range	3530361
Clamping jaw set 175 mm for extending the clamping range	3530362

MACHINE VICE

Machine vice PNM

- Modular vice for series production and single-part machining on CNC milling machines and machining centres
- Turntable
- Especially suited for tool, mould and jig building
- Alloyed tool steel material
- Guides tempered and polished
- Fast alignment via longitudinal and transverse grooves
- High precision
- High clamping force
- For horizontal and vertical use
- Low extension height
- Easy handling:

PNM 100	3355551
PNM 125	3355553

Technische Daten		A	B	C	D	E	F	G	H	kg
PNM 100	mm	180	100	270	85	20	30	95	35	10,3
PNM 125	mm	226	125	345	103	23	40	150	40	18,2

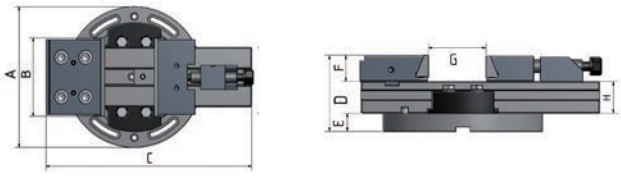

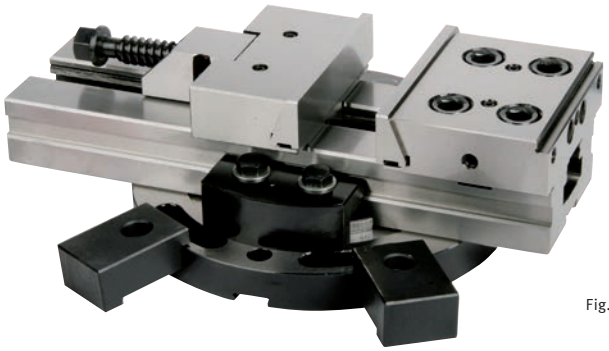

Fig.: PNM 100

Hydraulic machine vice HCV 105

- Modular machine vice with high precision and repetition accuracy for series production and single-part machining on CNC milling machines and machining centres
- Robust design for milling
- Guide surfaces tempered and polished
- Booster system, requires little force, high pressure build-up during clamping
- Large clamping range due to lock bolts with various hole spacings
- Made of premium grade stainless steel
- Long service life thanks to high quality
- High clamping force
- Clamping pressure 24.5 Nm
- Clamping force 2,500 kg
- Weight 22 kg

HCV 105	3536210

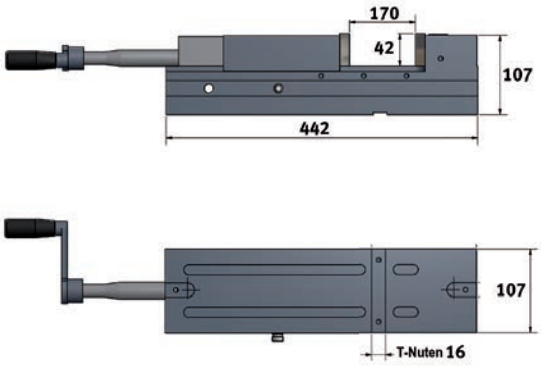

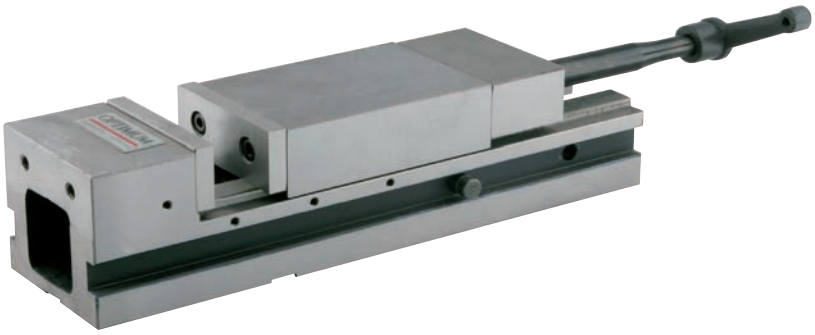

Hydraulic machine vice HCV 125

- Modular machine vice with high precision and repetition accuracy for series production and single-part machining on CNC milling machines and machining centres
- Robust design for milling
- Guide surfaces tempered and polished
- Booster system, requires little force, high pressure build-up during clamping
- Large clamping range due to lock bolts with various hole spacings
- Made of premium grade stainless steel
- Long service life thanks to high quality
- High clamping force
- Clamping pressure 40 Nm
- Clamping force 4,000 kg
- Weight 35.4 kg

HCV 125	3536214
Soft jaws 2 pcs.	3536221
L jaws 2 pcs.	3536222

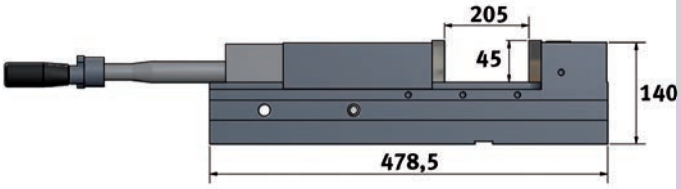

Hydraulic machine vice HCV 160

- Hydraulic CNC precision machine vice for series and one-off machining of workpieces on CNC milling centres and machining centres
- Patented anti-lift mechanism
- Guide surfaces tempered and polished
- Booster system, requires little force, high pressure build-up during clamping
- Large clamping range due to lock bolts with various hole spacings
- Made of premium grade stainless steel
- Spindle is protected against soiling and chips
- Parallelism: 0.01/100 mm. / Tolerance between bed and jaws: 0.02/100 mm
- Clamping pressure 60 Nm
- Clamping force 6,000 kg
- Weight 66 kg

HCV 160	3536215
Soft jaws 2 pcs.	3536225
L jaws 2 pcs.	3536226

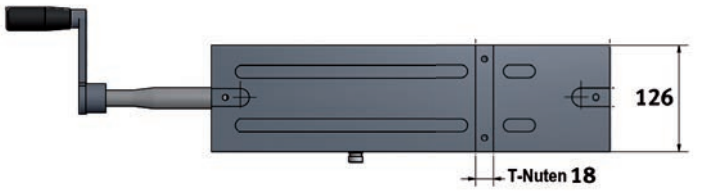

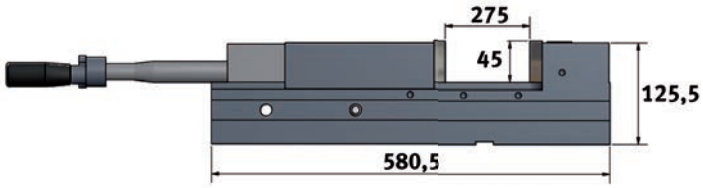

ACCESSORIES

Twist drill HSS with morse taper	
• 9-part; sizes 14.5/16/18/20/22/24/26/28/30 mm	
• Long service life.	
• Good chip removal	
• Right handed	
MK 2	3051002
MK 3	3051003

Spring collet set SPZ - 5C	3441509
• 17-part, clamping range 3 - 25 mm	
• Norm 385 E	
• For universal collet chuck device	

Chuck	3535170
• cylindrical collet Ø16 mm for B16 chuck	

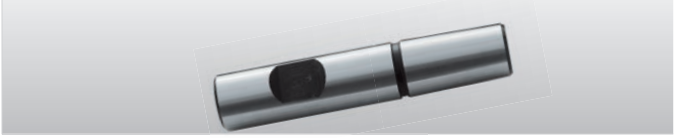

Edge sensor	3351171
• With rotating spindle	
• Probe Ø 10 mm	

Face-milling cutter without indexable inserts	
Face milling cutter Ø 63 mm bore, 27 mm	3536390
Face milling cutter Ø 50 mm bore, 22 mm	3536391

Indexable inserts	3536392
• APKT 1604 PDSR/MM SP7300	
• For face-milling cutter 3536390/3536391	
• Ten pcs.	

Clamping block set 16-05	3440653
Lathes: TU 3008 / TH 3309 / TH 3610	
• 1 pc. clamping block SLTBN 16-05	
• 1 pc. parting off tool SLIH 26-2	
• 1 pc. parting off tool SLIH 26-3	
• 5 pcs. cutting inserts GTN2 (cutting width 2.2 mm)	
• 5 pcs. cutting inserts GTN3 (cutting width 3.1 mm)	
• Aluminium box	

Clamping block set with clamping inserts and parting off tool

Replacement cutting insert set (10 pcs.)	
for cutting inserts **GTN 2**	3440663
for cutting inserts **GTN 3**	3440664

Clamping block	16-05
L x W x H (mm)	88 x 38 x 42
C	16 mm
GB	4 mm

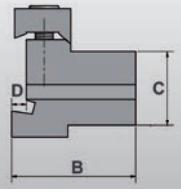

Travelling centre	
max. radial run-out 0.006 mm	
MK 2	3440702
• Max. speed 5,000 rpm; radial load max. 400 N	
MK 3	3440703
• Max. speed 4,500 rpm; radial load max. 800 N	
MK 4	3440704
• Max. speed 3,500 rpm; radial load max. 1,250 N	

Precision quick release chuck	
Concentricity better than 0.06 mm	
1 - 8 mm; B16	3050608
1 - 10 mm; B16	3050610
1 - 13 mm; B16	3050623
1 - 16 mm; B16	3050626
1 - 16 mm; B18	3050630

Made in Germany

Lathe tool set HM 12 mm	3441213

- 4-part
- With HM turning plates
- TiN coated
- Lathe tool for turning behind the centre

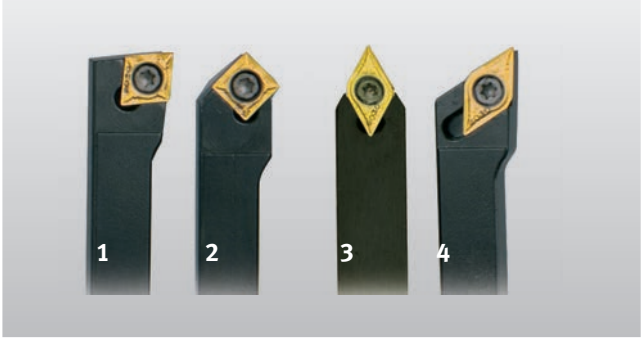

Single lathe tool 12 mm		
1	SSSC L1212J09	3441225
2	SCLC L1212J09	3441226
3	SDNC N1212J11	3441222
4	SDJC L1212J11	3441224

Made in Germany

Lathe tool set HM 16 mm	3441215

- 4-part
- With HM turning plates
- TiN coated
- Lathe tool for turning behind the centre

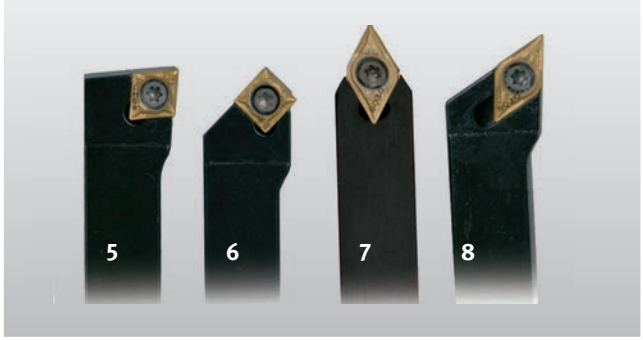

Single lathe tool 16 mm		
5	SSSC L1616J09	3441235
6	SCLC L1616J09	3441236
7	SDNC N1616J11	3441232
8	SDJC L1616J11	3441234

HM replacement turning plates (5 pcs. each)

3441280

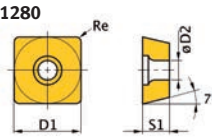

3441282

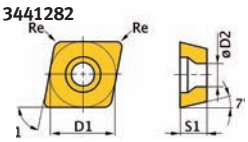

3441281

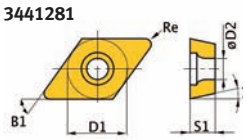

Lathe tool no.	ISO	D1	D2	B1	S1	right	Art. no.
2/6	SCMT09T304	9.525	4.4	90°	3.97	0.4	3441280
1/5	CCMT09T304	9.525	4.4	80°	3,97	0.4	3441282
3/4/7/8	DCMT11T304	9.525	4.4	55°	3,97	0.4	3441281

Assortment of clamping tools 58-part size

- Metric thread
- 24 pcs. pull studs 6 pcs. T-slot nuts
- 6 pcs. nuts 4 pcs. extension nuts
- 6 pcs. step blocks
- 12 pcs. step blocks
- Practical wall mount

Size 10	3352016

- T-slot nuts 12 mm; locking thread M 10

Size 12	3352017

- T-slot nuts 14 mm; locking thread M 12

Size 14	3352018

- T-slot nuts 16 mm; locking thread M 14

Size 16	3352019

- T-slot nuts 18 mm; locking thread M 16

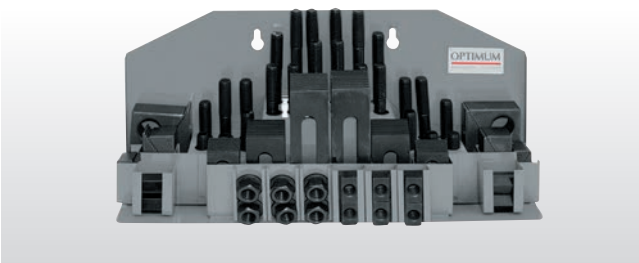

Vibration damping machine base

- The machines and equipment can be installed without anchors and precisely levelled using the height adjustment system.
- Effective impact and vibration damping improves the machine's capability

SE 1	3381012
SE 2	3381016
SE 3	3381018

Load	SE 1	SE 2	SE 3
Milling machines	340 kg	460 kg	1,600 kg
Sawing/gen. Machine	570 kg	1,460 kg	3,500 kg
Thread	M 12	M 16	M 20
Base Ø/Base height	120/32	160/35	185/39

KOMPRESSOREN / DRUCKLUFTTECHNIK

Die Einsteigermodelle

Die Montage-Profis

Die soliden Kompressoren für Handwerker

Fahrbare Profi-Kompressoren für den Handwerker mit Maximalausstattung

Die Stationären - Höchstleistung auf engstem Raum

Silent Kompressoren - für die Aufstellung in der direkten Arbeitsumgebung

Schraubenkompressoren und stationäre Schrauben-Verdichter

Druckluftverteilung Rohrleitungs-Stecksysteme

Druckluftverwendung - Druckluftwerkzeuge für verschiedenste Anwendungen

www.aircraft-kompressoren.de

OPTIMUM®
MASCHINEN - GERMANY

METALLBEARBEITUNGSMASCHINEN

Tischbohrmaschinen mit Keilriemen-, Brushless Antrieb oder stufenlosem mechanischen Getriebe

Säulenbohrmaschinen auch mit elektronisch stufenlos regelbarem Antrieb

Getriebebohrmaschinen Standard und in PREMIUM - Qualität

Bohr-Fräsmaschinen
Werkzeugfräsmaschinen
Universalfräsmaschinen

Metallbandsägen von kompakt bis zum Halbautomaten

Drehmaschinen konventionell oder als Vario, auch mit Siemens Inverter-Vario-Antrieb und in PREMIUM - Qualität

Schleifmaschinen in PREMIUM - Qualität, Poliermaschinen, Bohrerschleifgeräte, Tellerschleifer, Drehdornpressen

www.optimum-maschinen.de

stürmer®

WELT DER MASCHINEN

optimum-maschinen.de

holzkraft.de

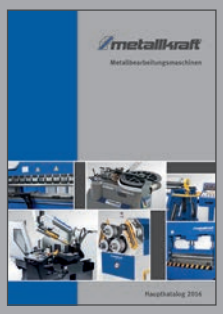

metallkraft.de

holzstar.de

schweisskraft.de

unicraft.de

aircraft-kompressoren.de

cleancraft.de

Your specialist retailer:

Sales Germany:
OPTIMUM Maschinen Germany GmbH
Dr.-Robert-Pfleger-Str. 26
96103 Hallstadt/Germany

Phone: +49 (0) 9 51 - 96 555 - 0
Fax +49 (0) 9 51 - 96 555-888
email: info@optimum-maschinen.de
Web: www.optimum-machines.com

Sales Austria:
AIRCRAFT Kompressorenbau und
Maschinengroßhandel GmbH
Gewerbestraße Ost 6
4921 Hohenzell / Austria
Phone: +43 (0) 77 52 - 70 929 - 0
Fax: +43 (0) 77 52 - 70 929 - 99
email: info@aircraft.at
Web: www.aircraft.at

Main Catalogue

CNC Catalogue

Automation