INTEVA

www.inteva.es

DNV·GL

MANAGEMENT SYSTEM CERTIFICATE

Certificate No:	Initial certification date:	Valid:
195588-2016-AQ-IBE-ENAC	22 February 2016	22 February 2016 - 19 February 2019

This is to certify that the management system of

INDUSTRIAS TÉCNICAS DE VALVULERÍA, S.A.

C/ Berguedà,14-16 (Esq.Empordà), Pol. Ind. Can Bernardes - Subirà, 08130, Santa Perpetua de Mogoda, Barcelona, Spain

has been found to conform to the Quality Management System standard:
ISO 9001:2008

This certificate is valid for the following scope:
DESIGN, MANUFACTURE AND SALES OF QUICK COUPLINGS, CHECK VALVES AND BALL VALVES.

Place and date:
Barcelona, 22 February 2016

ENAC
CERTIFICACIÓN
Nº 03/C-SC005

For the issuing office:
DNV GL – Business Assurance
Edificio Inbisa Mas Blau, C/ Garrotxa 6-8, 3º 1ª, El Prat de Llobregat, 08820, Barcelona, Spain

ANA TERESA DEL RIO SALGADO
Digitally signed by ANA TERESA DEL RIO SALGADO
Date: 2016.03.08 15:34:10 +01'00'

Ana del Rio Salgado
Management Representative

ficaciones en sus productos sin

INDEX

INTEVA

INDEX

INTEVA

INDEX

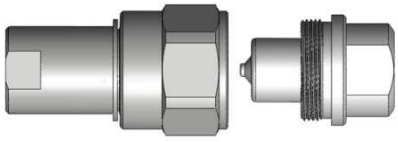

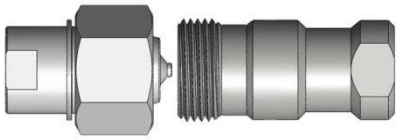

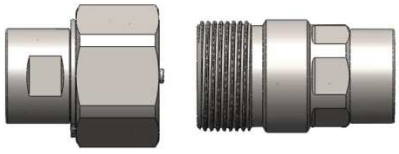

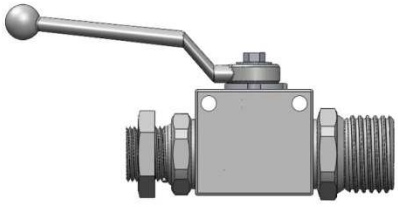

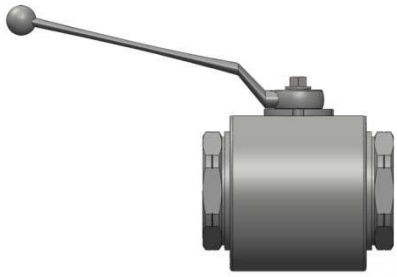

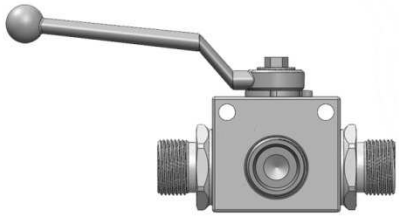

INTEVA

INDEX

INTEVA

DIRECTIONS FOR USE
Quick Couplings

Before installation!!!

- **Read carefully the assembly and safety instructions.**
- Installation of Quick Couplings can be only done by well **qualified personnel**.
- **Check whether the product meets the requirement** and if it has been damaged during transport.
- **Ensure that quick coupling is suitable for installation, required pressure, connection, flow characteristic and is compatible with the medium used.**
- **Before installation clean up hose and pipes.**
- Check that line **temperature** work within permitted limits.
- **Verify if maximal working pressure is equal or higher than the peak pressures of the application.**
- Verify that **the number of cycle impulses** of the product is compatible with those of the application.

Start-up!!

- **Installation of Quick couplings can be only done if the circuit is depressurized.**
- Make sure the **energy supply is disconnected.**
- **Always wear protective clothing.**
- **Use flexible hoses** to withstand better the system vibration and mechanical tensions on the couplings.
- **Use appropriate tools** to act only over flat sides of the couplings
- Hose must be installed so that the connection/disconnection can be done easily and **aligned position**.
- **Make sure to work always within permitted limits on pressure and temperature**.
- Lubricate the seals and run always a **test connection** to ensure both halve connect correctly.
- **Connect screw couplings always up to the stop mark.**

Storage

All our quick and screw couplings are brought through a heat and surface treatment to improve its conservation. We recommend:

- Store in cool, dry, and high places above the ground.
- Keep away from heat sources or direct impact of the sunlight.
- Review periodically the valves whether these have signs of corrosion, cracks and/or visible damages.

Maintenance

- To avoid unexpected damages, **run regularly inspections**. If during inspection or first runs following conditions are detected, system should be turned off and the product replaced:
  - ✓ Malfunction
  - ✓ Presence of leakage
  - ✓ Visible damages, cracks and or corrosion
  - ✓ Difficulties by connecting/disconnecting
  - ✓ System contamination
- Sealing components should be lubricated with compatible lubricant.
- The maintenance period should be defined by the end user depending on the type of application and operating conditions.

The functionality of the product can be affected by a wrong maintenance.

Warnings!!!

- **Avoid contaminating the hydraulic system**. Contaminated mediums can damage internal sealing components leading to leakages and malfunctions.
  - Before installation **clean up hose and pipes**.
  - Before connection **clean up** both halves male and female.
  - After disconnection **use our dust caps and plugs to protect** the couplings from dirt and external damages.
- **Lateral loads, vibration and mechanical stress in general, can cause misalignment of couplings** during connection / disconnection and can cause unwanted disconnection, damage the connection and sealing. It reduces significantly the life of the product. We recommend using flexible hoses.
- **Do never use inappropriate tool** e.g. clamp tools, hammers, key tools. It can damage the couplings leading to malfunction.
- While disconnecting, depending on the positioning and temperature the **residual pressure** can reach high values. **Do not use any tool to force the disconnection and relieve the pressure trapped inside.**
- **Operating over and under the permitted working pressure and temperature limits, leads to deterioration and leakages of the quick couplings.**
- **Do not connect and disconnect at temperatures < 80ºC**. Operating between 30ºC – 80ºC use gloves and other safety devices to prevent injury itself, thirds, animals and/or objects.
- **Never rotate the couplings while under pressure**.
- **Use care if you must install quick couplings onto iron pipe**.
- In case of malfunction, quick coupling must be replaced by qualified personnel. First depressurize and drain the system. If necessary, out of service.
- **If our quick couplings are dismantled improperly without authorization, any warranty and damage claim against the manufacturer are null and void.**
- **Any changes on design or reworks on quick couplings e.g. dimensional or superficial, is strictly prohibited without previous consultation with the manufacturer.** .
- This manual is not intended to replace any national regulation on accident prevention and local safety regulations of the operating company, which on this should be considered a priority.

INTEVA and its distributors are not responsible for damages caused on people or machines for an improper use or incorrect maintenance of the products.

The product selection, installation, maintenance and use, is under end users responsibility.

The distributor must ensure that that all product requirements are met and must inform the end user about the product use and maintenance.

Elimination

In compliance with the laws of each country on the disposal of industrial waste, the quick couplings in disuse must be eliminated taking into account that all components can be recycled.

Consider that:

- Elimination and removal must be done by qualified personnel only.
- Before extraction, depressurize pipes and circuit. The quick couplings must relieve pressure from its cavity as well.

V160421

DIRECTIONS FOR USE
CPR Flat Face

WARNINGS!

Avoid contaminating the system. In this way, we avoid the waste inclusion that can damage the sealing elements. Contaminating the hydraulic fluid that leads to leakages and malfunctions.

If dirt enters in **Zone 1**, **internal sealing components can be damaged** (O-Ring, Back-up Ring)

Dirt is the main cause of a malfunction on this part of the coupling.

Recommendations...

- Before installing, **clean-up the hoses and pipes**.
- Before connecting: **clean-up** carefully the flat faces either on male and female coupling.
- While disconnecting: never leave the couplings on the ground, use **our dust caps/plugs** to protect from contaminating and external damages.

Do not damage the flat side of the male coupling, Zone 1. This can lead to damages on internal sealing components of the female half while connecting both parts.

Do not overload the coupling. Fix the hoses by flexible supports.

Avoid rotations between both couplings male and female.

While connected it is difficult to detect leakages!

*If **the sealing** components (O-Ring, Back-up Ring) of the male coupling are damaged, **in most of the cases the leakage cannot be detected.** While connecting, the damaged seal is exposed and leakages appear on the sleeves of the female coupling. Generally the female coupling as an individual element isn't damaged.*

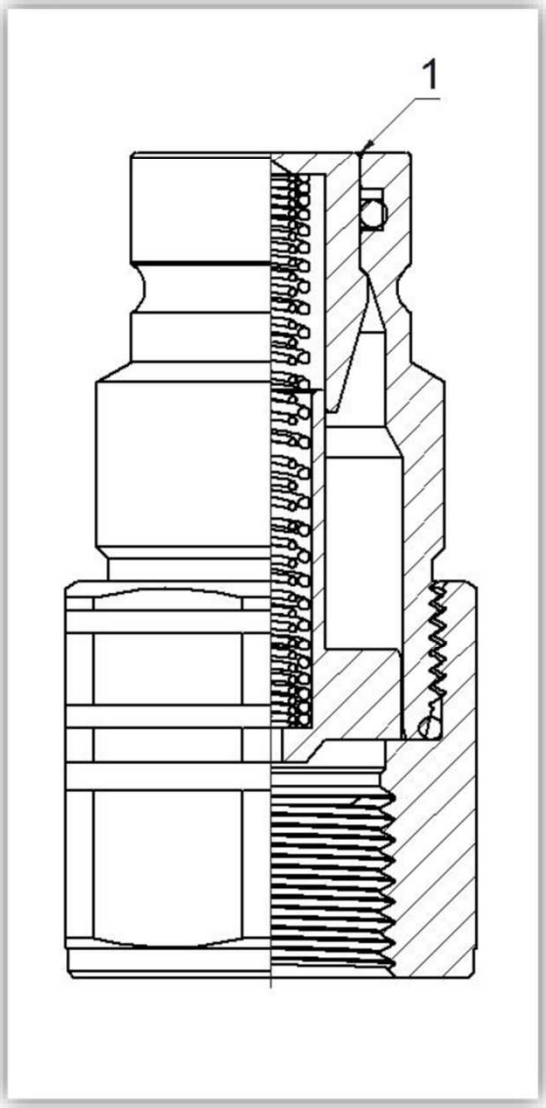

Do never use a SCREWDRIVER for moving the flat valves back, forcing the opening of these and relieve the residual pressure trapped in the circuit, running the risk to **damage the seals** by sliding on the smooth surface on the flat front.

V160421

DIRECTIONS FOR USE
CPR Flat Face

WARNINGS!

Avoid contaminating the system. In this way, we avoid the waste inclusion that can damage the sealing elements. Contaminating the hydraulic fluid that leads to leakages and malfunctions.

If dirt enters in Zone 1, 2 or 3, following failures can appear:

1. ***Male half and female*** *half cannot be engaged.*
2. *Dirt can damage internal component **4**. When connected, female leaks.*
3. *If dirt enters in **Zone 5** it can affect the back movement of the sleeve what leads to an inappropriate connection between both halves.*
4. ***Ensure pulling the sleeve totally down for a safety disconnection**.*

Dirt is the main cause of a malfunction on this part of the coupling.

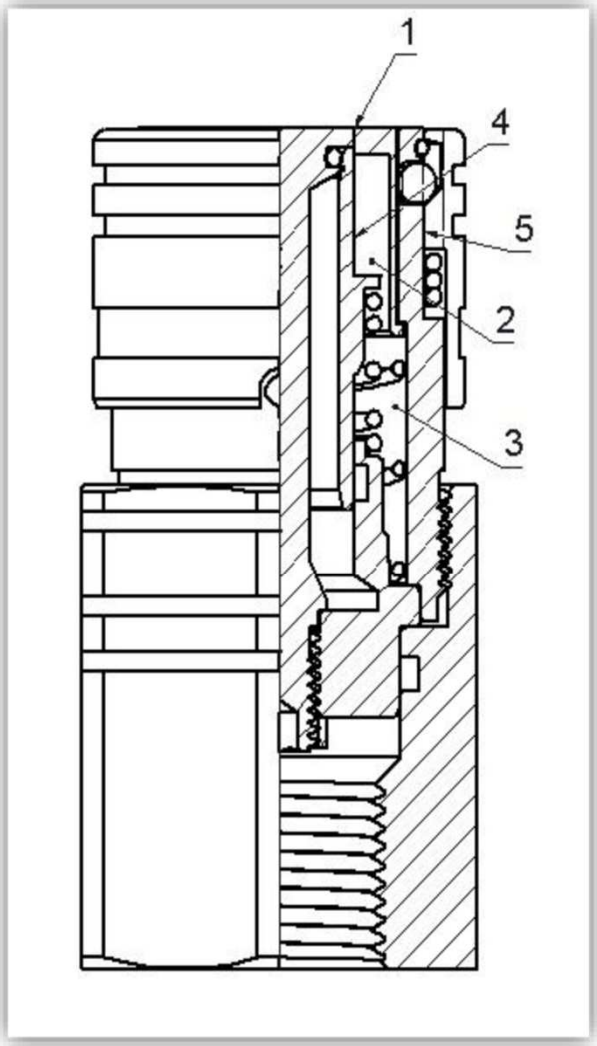

Recommendations...

- Before installing, **clean-up the hoses and pipes**.
- Before connecting: **clean-up** carefully the flat faces either on male and female coupling.
- While disconnecting: never leave the couplings on the ground, use **our dust caps/plugs** to protect from contaminating and external damages.

Decompression...

If female coupling is pressurized and pressure cannot be relieved by a control unit, the decompression of the female coupling is not possible.

V160421

DIRECTIONS FOR USE
Ball Valves

Before installation!!!

- Read carefully the assembly and safety instructions.
- Installation of the ball valves can be only done by well **qualified personnel.**
- Check whether the product meets the requirement and if it has been damaged during transport.
- **Ensure that valve is suitable for installation, required pressure, connection, flow characteristic and is compatible with the medium used.**
- **Before installation clean up hose and pipes**.
- Check that line temperature work within permitted limits.
- **Verify that the application pressure is equal or less than the maximum working pressure of the valve.**

Start-up!!

- **Installation of ball valves can be only done if the circuit is depressurized.** 1
- **Make sure the energy supply is disconnected.**
- **Always wear protective clothing**.
- **Remember to bleed and drain the pipe system** before starting the installation. Air bubbles can cause explosions by pressurizing abruptly again.
- **For connecting the valve during installation, always fix the thread adapter through a wrench.** 4
- **Make sure to work always within permitted limits on pressure and temperature.** 5
- **The valve is opened when the handle is in longitudinal position** (parallel to the line). Valve is closed when the handle is in perpendicular position (right angle to the line). Switch the handle always 90º to reach the limit for opening or closing the flow.
- **Ball valves can be installed** in angle, vertical and horizontal position.
- **Run always a test** after installation.

Storage!!!

All our ball valves are brought through a surface treatment to improve its conservation. We recommend:

- Store in cool, dry, and high places above the ground.
- Keep away from heat sources or direct impact of the sunlight.
- Review periodically the valves whether these have signs of corrosion, cracks and/or visible damages.

Maintenance

- The ball valves should never be manipulated or unassembled. We warn to not use any kind of sealant.
- To avoid unexpected damages, **run regularly inspections**. If during inspection or first runs following conditions are detected, system should be turned off and the product replaced:
  - ✓ Malfunction
  - ✓ Presence of leakage
  - ✓ Visible damages, cracks and or corrosion
  - ✓ Difficulties by switching handle
  - ✓ System contamination
- The maintenance period should be defined by the end user depending on the type of application and operating conditions.
- After a long storing period or a long breakdown in operating position, the torque is higher than the force on impulse.

Warnings!!!

- The ball valves **are not approved for controlling the flow constriction. Intermediate positions can cause damages on the ball seats**. This leads to leakages. Flow constriction causes also an important increase of temperature. 2
- **Do never use inappropriate tool** e.g. clamp tools, hammers, key tools. It can damage the steam and valve body. 3
- **Do never tight or loose the extremes of the ball valve, this leads to a torque increase and leakages**.
- **When installing the valve in a circuit, do always hold it from the end ports with a hexagonal key spanner**. Holding the valve from the body or handle will loosen the torque, causing leakages.
- **Avoid contaminating the hydraulic system**. Contaminated mediums can damage internal sealing components.
- **Operating over and under the permitted working pressure and temperature limits, leads to deterioration and leakages of the ball valve**.
- In case of malfunction, ball valve must be replaced by qualified personnel. First depressurize and drain the system. If necessary, out of service.
- **Repairs and reworks can be only done by the manufacturer or qualified and authorized personnel.**
- **If our ball valves are dismantled improperly without authorization, any warranty and damage claim against the manufacturer are null and void.**
- **Any changes on design or reworks on ball valve e.g. drilling fixing holes, welding plates are strictly prohibited without previous consultation with the manufacturer.** 6
- This manual is not intended to replace any national regulation on accident prevention and local safety regulations of the operating company, which on this should be considered a priority.

INTEVA and its distributors are not responsible for damages caused on people or machines for an improper use or incorrect maintenance of the products.

The product selection, installation, maintenance and use, is under end users responsibility.

The distributor must ensure that that all product requirements are met and must inform the end user about the product use and maintenance.

Elimination!!!

In compliance with the laws of each country on the disposal of industrial waste, the valves in disuse must be eliminated taking into account that all components can be recycled.

Consider that:

- Elimination and removal must be done by qualified personnel only.
- Before extraction, depressurize pipes and circuit. Ball valve must relieve pressure from its cavity as well.

V160421

101 SERIES
ISO-A

Manufactured according ISO 7241-A norm, DN13 size meets also ISO 5675 requirements.
Poppet Valve or Ball closing system.
BSP, NPTF, SAE/ORB threads. Others available upon request.

• Materials

Body: Carbon Steel EN -10277-3
Seals: *NBR, Viton or EPDM*
Back-Up-Ring: *PTFE*
Balls: *AISI 1010/1015*
Springs: *Carbon Steel*
DIN 17233/84(B)

• Applications: Designed for Oil hydraulic Applications according to European Directive 97.23.EC

• Equivalence

FASTER ANV
AEROQUIP FD56
PARKER 6600
SNAP-TITE 61

• Working temperature (Seals)

	NBR	Viton	EPDM
	+100ºC	+200ºC	+150ºC
	-30ºC	-10ºC	-40ºC

• Sectors: Industrial, Agricultural

MODEL STRUCTURE

Example;

101.11112 BC

Series	Material	Part	Closing	O-Ring	Size	Thread
101.	**1** → Carbon ST **2** → AISI 316 **3** → AISI 303 **4** → Brass	**1** → Male **2** → Female	**0** → Without **1** → Poppet V. **2** → Ball **3** → C.U.R.P.*	**0** → Without **1** → NBR **2** → Viton **3** → EPDM	DN **1**→ 06 ¼” **2**→ 10 ⅜” **3**→ 13 ½” **4**→ 20 ¾” **5**→ 25 1” **6**→ 32 1 ¼” **7**→ 40 1 ½” **8**→ 50 2”	2 letters (see Table of Threads page 999-1)

* **DN13 available only.**

101 SERIES
ISO-A

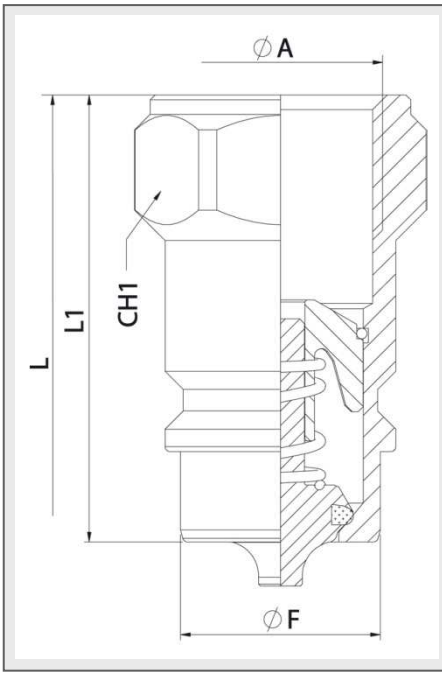

MALE

DN	CH1	L1	ØF	L
06	19	38	11,80	76
10	22	40,50	17,25	81
13	27 / 30	46	20,56	87,50
20	36	56	29	112
25	41	63	34,30	126
32	50	75	44,95	150
40	60	83,5	55	167
50	75	105	65,10	210

Manufactured according to ISO 7241-A norm, DN13 size meets as well ISO 5675 requirements.

L= lenght while quick coupling is connected.

STANDARD MODELS

DN	ØA	MALE	FEMALE	
06	¼" BSP	101.11111AB	101.12111AB	350Bar
	¼" NPTF	101.11111BB	101.12111BB	
10	⅜" BSP	101.11112AC	101.12112AC	300Bar
	⅜" NPTF	101.11112BC	101.12112BC	
	⅜" BSPT	101.11112DC	101.12112DC	
	9/16" 18ORB	101.11112GC	101.12112GC	
13	½" BSP	101.11113AD	101.12113AD	300Bar
	½" NPTF	101.11113BD	101.12113BD	
	M22x1,5	101.11113NG	101.12113NG	
	¾" - 16ORB	101.11113GF	101.12113GF	
	⅞" 14ORB	101.11113GH	101.12113GH	
20	¾" BSP	101.11114AE	101.12114AE	250Bar
	¾" NPTF	101.11114BE	101.12114BE	
	1 1/16"-12ORB	101.11114GK	101.12114GK	
25	1" BSP	101.11115AF	101.12115AF	230Bar
	1" NPTF	101.11115BF	101.12115BF	
	1 5/16"-12ORB	101.11115GO	101.12115GO	
32	1 ¼" BSP	101.11116AG	101.12116AG	230Bar
	1 ¼" NPTF	101.11116BG	101.12116BG	
40	1 ½" BSP	101.11117AH	101.12117AH	200Bar
	1 ½" NPTF	101.11117BH	101.12117BH	
50	2" BSP	101.11118AI	101.12118AI	130Bar
	2" NPTF	101.11118BI	101.12118BI	

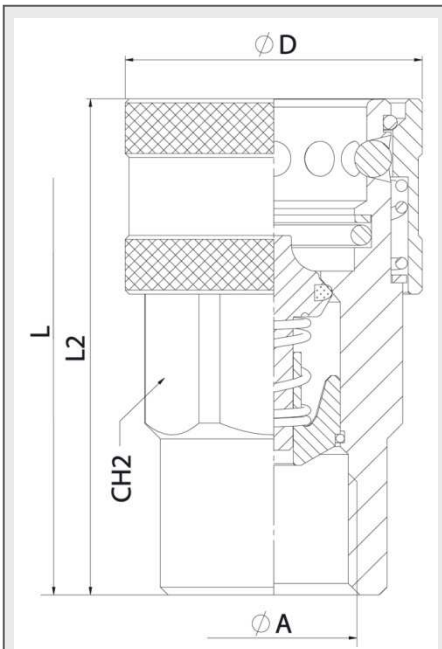

FEMALE

DN	CH2	L2	ØD	L
06	19	52	26	76
10	24	58,50	32	81
13	30	63,50	38	87,50
20	38	83,50	46	112
25	46	97	55	126
32	50	117	70	150
40	60	133	84,50	167
50	75	165	100	210

Manufactured according to ISO 7241-A norm, DN13 size meets as well ISO 5675 requirements

L= lenght while quick coupling is connected.

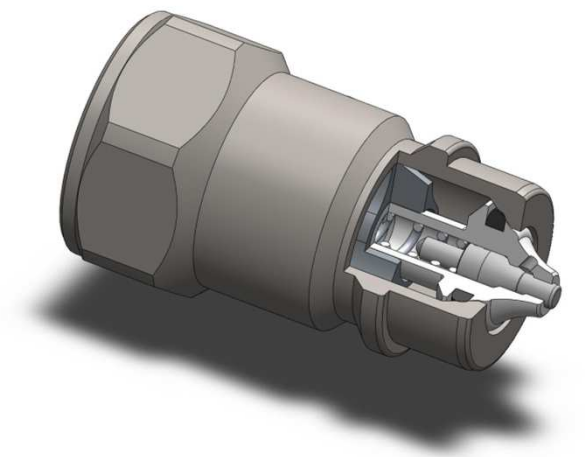

C.U.R.P. connection is available in DN13 Up to 300 Bar.

101 SERIES
ISO-A

TECHNICAL DATA

DN	Rated Flow	Min Burst Pressure (Bar)			Working Pressure
		Male	Female	Connected	Bar
06	15 l/min	1650	1800	1400	350
10	35 l/min	1250	1350	1200	300
13	45 l/min	1200	1300	1200	300
20	74 l/min	1030	1200	1000	250
25	100 l/min	950	980	920	230
32	118 l/min	800	950	920	230
40	410 l/min	750	850	800	200
50	860 l/min	620	650	520	130

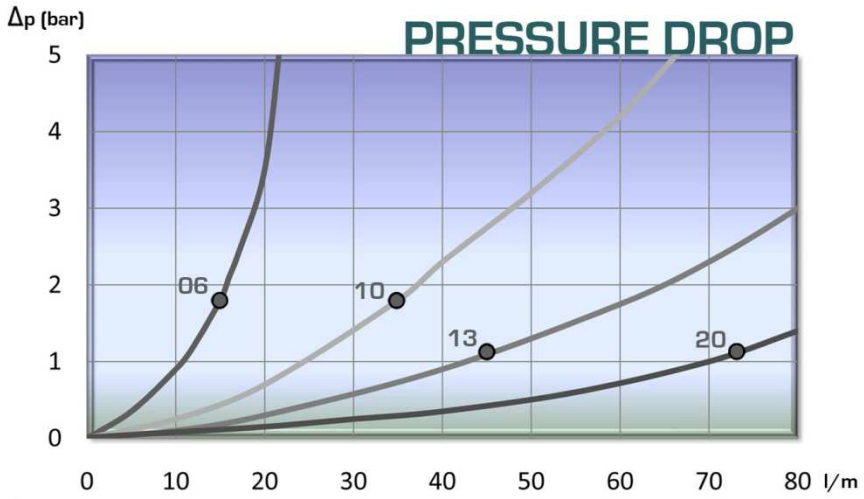

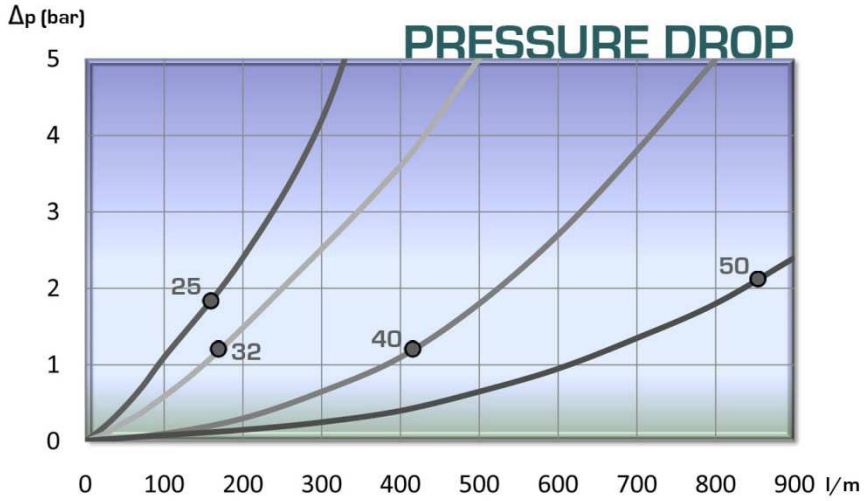

101 SERIES
ISO-A AISI 316

Manufactured according ISO 7241-A norm, DN13 size meets also ISO 5675 requirements.
Poppet Valve or Ball closing system.
BSP, NPTF, SAE/ORB threads. Others available upon request.

• Materials

Body: *AISI 303 / AISI316 / BRASS DIN-EN-12164*
Seals: *NBR , Viton or EPDM*
Back-Up-Ring: *PTFE*
Balls: *AISI 316W 14401*
Springs: *AISI302 DIN 17224*

• Working temperature (Seals)

	NBR	Viton	EPDM
	+100ºC	+200ºC	+150ºC
	-30ºC	-10ºC	-40ºC

• Applications: Designed for Oil hydraulic Applications according to European Directive 97.23.EC

• Sectors: Chemical, Industrial, Offshore Industry

• Equivalence

FASTER ANV
AEROQUIP FD56
PARKER 6600
SNAP-TITE 61

MODEL STRUCTURE

Example;

101.21113 AD

Series	Material	Part	Closing	O-Ring	Size	Thread
101.	**2** → AISI 316 **3** → AISI 303 **4** → Brass	**1** → Male **2** → Female	**0** → Without **1** → Poppet V. **2** → Ball **3** → C.U.R.P.*	**0** → Without **1** → NBR **2** → Viton **3** → EPDM	DN **1** → 06 ¼" **2** → 10 ⅜" **3** → 13 ½" **4** → 20 ¾" **5** → 25 1" **6** → 32 1 ¼" **7** → 40 1 ½" **8** → 50 2"	2 letters (see Table of Threads page 999-1)

* **DN13 available only.**

101 SERIES
ISO-A AISI 316

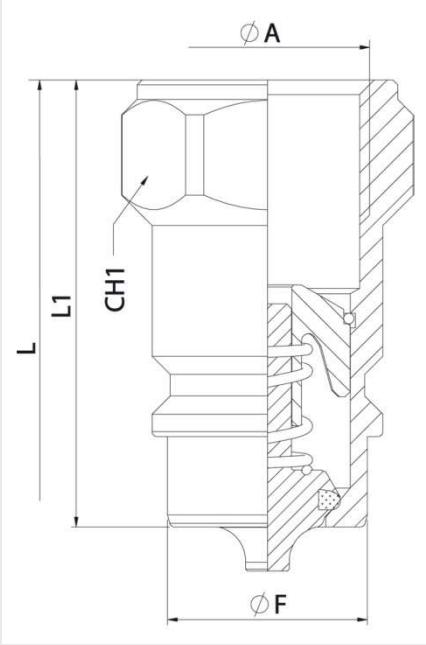

MALE

DN	CH1	L1	ØF	L
06	19	38	11,80	76
10	22	40,50	17,25	81
13	27 / 30	46	20,56	87,50
20	36	56	29	112
25	41	63	34,30	126
32	50	75	44,95	150
40	60	83,5	55	167
50	75	105	65,10	210

STANDARD MODELS

DN	ØA	MALE	FEMALE	
06	¼" BSP	101.21121AB	101.22121AB	280Bar
	¼" NPTF	101.21121BB	101.22121BB	
10	⅜" BSP	101.21122AC	101.22122AC	260Bar
	⅜" NPTF	101.21122BC	101.22122BC	
13	½" BSP	101.21123AD	101.22123AD	260Bar
	½" NPTF	101.21123BD	101.22123BD	
20	¾" BSP	101.21124AE	101.22124AE	210Bar
	¾" NPTF	101.21124BE	101.22124BE	
25	1" BSP	101.21125AF	101.22125AF	210Bar
	1" NPTF	101.21125BF	101.22125BF	
32	1 ¼" BSP	101.21126AG	101.22126AG	140Bar
	1 ¼" NPTF	101.21126BG	101.22126BG	
40	1 ½" BSP	101.21127AH	101.22127AH	120Bar
	1 ½" NPTF	101.21127BH	101.22127BH	
50	2" BSP	101.21128AI	101.22128AI	100Bar
	2" NPTF	101.21128BI	101.22128BI	

Manufactured according to ISO 7241-A norm, DN13 size meets as well ISO 5675 requirements.

L= lenght while quick coupling is connected.

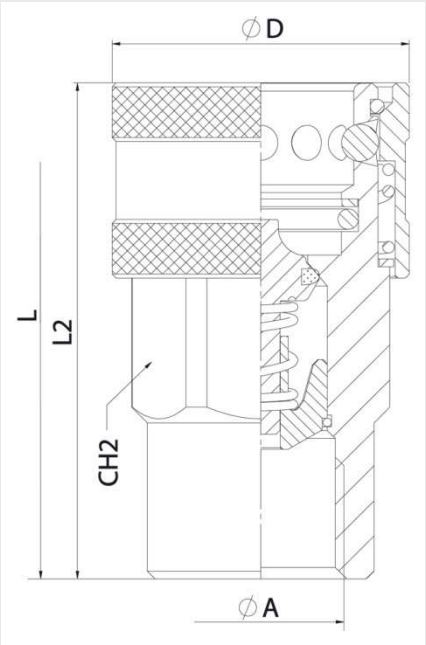

FEMALE

DN	CH2	L2	ØD	L
06	19	52	26	76
10	24	58,50	32	81
13	30	63,50	38	87,50
20	38	83,50	46	112
25	46	97	55	126
32	50	117	70	150
40	60	133	84,50	167
50	75	165	100	210

Manufactured according to ISO 7241-A norm, DN13 size meets as well ISO 5675 requirements

L= lenght while quick coupling is connected.

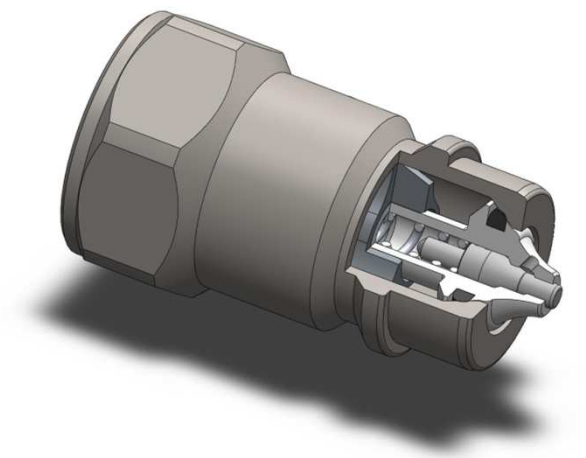

C.U.R.P. connection is available in DN13 Up to 260 Bar.

101 SERIES
ISO-A AISI 316

TECHNICAL DATA

DN	Rated Flow	Min Burst Pressure (Bar)			Working Pressure
		Male	Female	Connected	Bar
06	15 l/min	1150	1200	1250	280
10	35 l/min	1060	1075	1200	260
13	45 l/min	1050	1150	1200	260
20	74 l/min	855	875	900	210
25	100 l/min	850	875	900	210
32	118 l/min	500	500	650	140
40	410 l/min	480	500	600	120
50	860 l/min	405	415	550	100

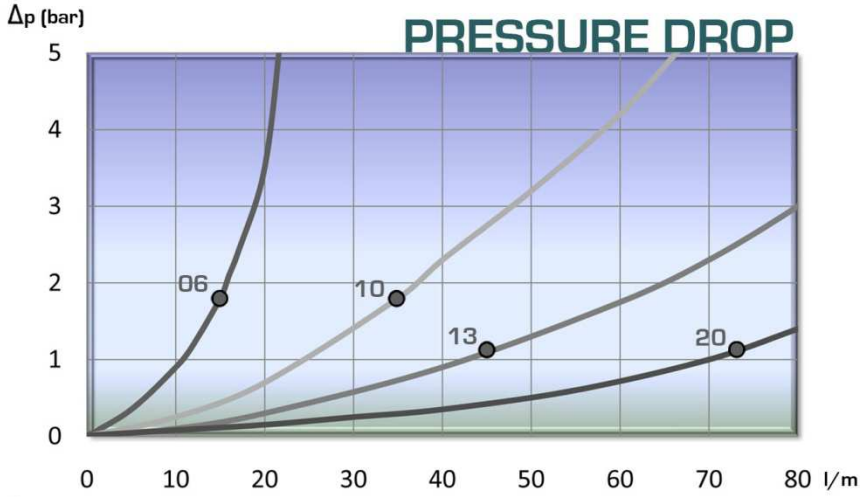

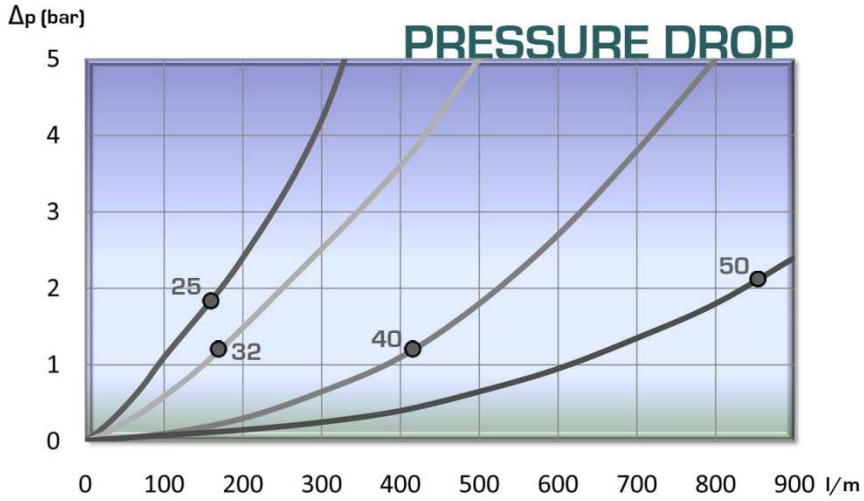

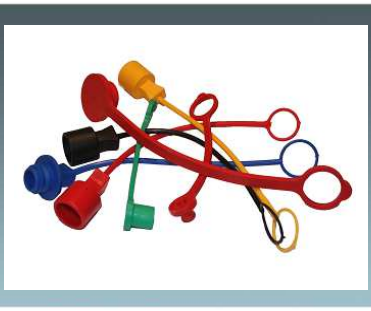

101 SERIES
ISO-A PLUGS & CAPS

ISO A SERIES PLUGS/ CAPS have been designed to protect FEMALE (coupler) or MALE (nipple) parts while they are disconnected.
Manufacured according to ISO 7241-A norm, DN13 size meets as well ISO 5675 requirements.

Example;

101.5313 AA

Series	Material	Part	Colour	Size	Type
101. 105. 107.	**1** → Carbon ST **5** → Plastic	**3** → Plug **4** → Cap **5** → Parking	**0** → Plain Metal **1** → Red **2** → Blue **3** → Yellow **4** → Green **5** → Black **6** → White		AA

	DN
1 → ¼"	06
2 → ⅜"	10
3 → ½"	13
4 → ¾"	20
5 → 1"	25
6 → 1 ¼"	32
7 → 1 ½"	40
8 → 2"	50

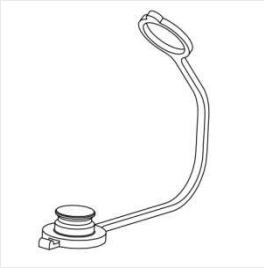

PLUG

DN	RED	BLUE	YELLOW	GREEN	BLACK	WHITE
06	101.5311AA	*	*	*	*	*
10	101.5312AA	*	*	*	*	*
13	101.5313AA	*	*	*	*	*
20	101.5314AA	*	*	*	*	*
25	101.5315AA	*	*	*	*	*

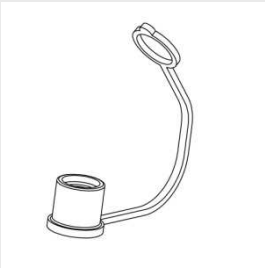

CAP

DN	RED	BLUE	YELLOW	GREEN	BLACK	WHITE
06	101.5411AA	*	*	*	*	*
10	101.5412AA	*	*	*	*	*
13	101.5413AA	*	*	*	*	*
20	101.5414AA	*	*	*	*	*
25	101.5415AA	*	*	*	*	*

* Available upon request.

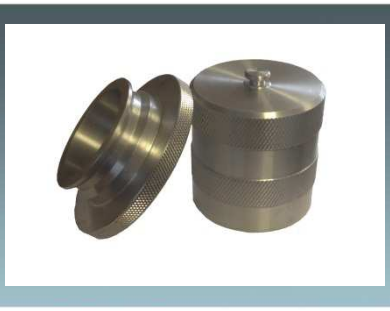

SERIE 101
ISO-A

PLUGS &
CAPS
ALUMINUM

ISO A SERIES PLUGS/ CAPS have been designed to protect FEMALE (coupler) or MALE (nipple) parts while they are disconnected.
Manufacured according to ISO 7241-A norm.

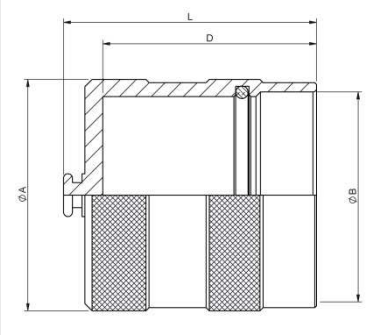

CAP

DN	ØA	REF.	ØB	L	D
32	59	101.6406AA	48	66	55
40	64,8	101.6407AA	57,8	71	60
50	80	101.6408AA	70,2	80	75

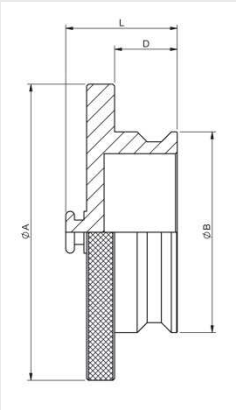

PLUG

DN	ØA	REF.	ØB	L	D
32	69,5	101.6306AA	47,7	30	16
40	84,8	101.6307AA	57,5	32	18
50	100	101.6308AA	69,8	33	25

101 SERIES
ISO-A

PARKINGS

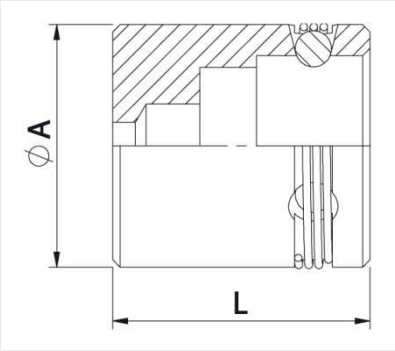

PARKING 3B

DN	REF.	ØA	L
13	101.1533AA	32	34

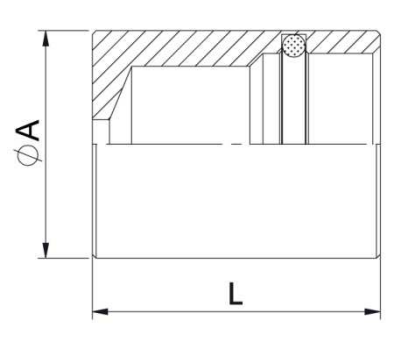

PARKING 1T

DN	REF.	ØA	L
13	101.1533AC	30	38

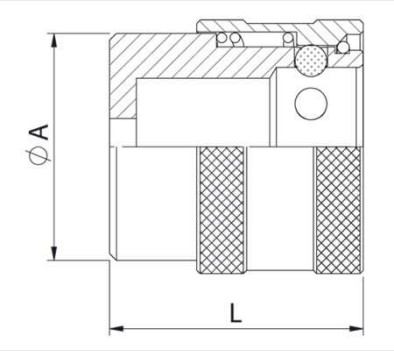

PARKING 6B

DN	REF.	ØA	L
13	101.1533AB	34	38

102 SERIES
ISO-A

MULTI -THREADS

Manufactured according ISO 7241-A norm, DN13 size meets also ISO 5675 requirements.
Poppet Valve or Ball closing system.
BSP, NPTF, SAE/ORB threads. Other threads available upon request.

• Materials

Body: Carbon Steel EN -10277-3
Seals: *NBR , Viton or EPDM*
Back-Up-Ring: *PTFE*
Balls: *AISI 1010/1015*
Springs: *Carbon Steel*
DIN 17233/84(B)

• Working temperature (Seals)

	NBR	Viton	EPDM
	+100ºC	+200ºC	+150ºC
	-30ºC	-10ºC	-40ºC

• Applications: Designed for Oil hydraulic Applications according to European Directive 97.23.EC

• Sectors: Industrial, Agricultural

• Equivalence

FASTER ANV
AEROQUIP FD56
PARKER 6600
SNAP-TITE 61

MODEL STRUCTURE

Example;

102.11112 JE

Series	Material	Part	Closing	O-Ring	Size	Thread
102.	**1** → Carbon ST **2** → AISI 316 **3** → AISI 303 **4** → Brass	**1** → Male **2** → Female	**0** → Without **1** → Poppet V. **2** → Ball **3** → C.U.R.P.*	**0** → Without **1** → NBR **2** → Viton **3** → EPDM	DN **1**→ 06 ¼” **2**→ 10 ⅜” **3**→ 13 ½” **4**→ 20 ¾” **5**→ 25 1” **6**→ 32 1 ¼” **7**→ 40 1 ½” **8**→ 50 2”	2 letters (see Table of Threads page 999-1)

*** DN13 available only.**

102 SERIES
ISO-A

DIN 2353

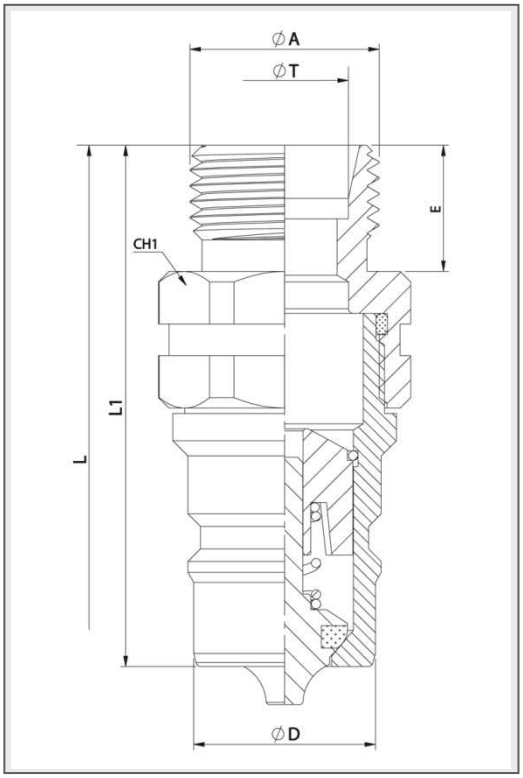

STANDARD MALE MODELS

DN	ØA	ØT	REF.		CH1	L1	ØD	E	L	
06	M12x1,5	6L	102.11111JB	350Bar	19	*	11,8	12	*	Light Series
	M14x1,5	8L	102.11111JC							
10	M18x1,5	12L	102.11112JE	300Bar	22	*	17,25	12	*	
	M14x1,5	8L	102.11112JC							
	M16x1,5	10L	102.11112JD							
	M18x1,5	12L	102.11112JE							
13	M14x1,5	8L	102.11113JC	300Bar	27	*	20,56	12	*	
	M16x1,5	10L	102.11113JD							
	M18x1,5	12L	102.11113JE							
	M22x1,5	15L	102.11113JG							
	M26x1,5	18L	102.11113JI							
20	M18x1,5	12L	102.11114JE	250Bar	36	*	29	12	*	
	M22x1,5	15L	102.11114JG							
	M26x1,5	18L	102.11114JI							
	M30x2	22L	102.11114JJ					18		
25	M26x1,5	18L	102.11115JI	230Bar	41	*	34,3	12	*	
	M30x2	22L	102.11115JJ					18		
	M36x2	28L	102.11115JK							
	M45x2	35L	102.11115JM					16		
10	M16x1,5	8S	102.11112KD	300Bar	22	*	17,25	12	*	Heavy Series
	M18x1,5	10S	102.11112KE							
	M20x1,5	12S	102.11112KF							
13	M18x1,5	10S	102.11113KE	300Bar	27	*	20,56	12	*	
	M20x1,5	12S	102.11113KF							
	M22x1,5	14S	102.11113KG							
	M24x1,5	16S	102.11113KH							
20	M24x1,5	16S	102.11114KH	250Bar	36	*	29	12	*	
	M30x2	20S	102.11114KJ					16		
25	M30x2	20S	102.11115KJ	230Bar	41	*	34,3	18	*	
	M36x2	25S	102.11115KK							
	M42x2	30S	102.11115KL		46					
	M52x2	38S	102.11115KN		55			20		

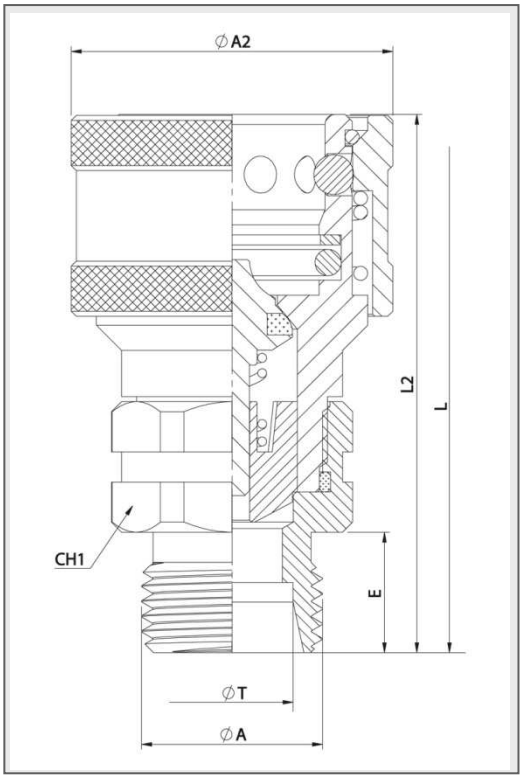

STANDARD FEMALE MODELS

DN	ØA	ØT	REF.		CH1	L2	ØA2	E	L	
06	M12x1,5	6L	102.12111JB	350Bar	19	*	26	12	*	Light Series
	M14x1,5	8L	102.12111JC							
10	3/8" BSP M.	*	102.12112AN	300Bar	22	*	32	12	*	
	M14x1,5	8L	102.12112JC							
	M16x1,5	10L	102.12112JD							
	M18x1,5	12L	102.12112JE							
13	M14x1,5	8L	102.12113JC	300Bar	27	*	38	12	*	
	M16x1,5	10L	102.12113JD							
	M18x1,5	12L	102.12113JE							
	M22x1,5	15L	102.12113JG							
	M26x1,5	18L	102.12113JI							
20	M18x1,5	12L	102.12114JE	250Bar	36	*	46	12	*	
	M22x1,5	15L	102.12114JG							
	M26x1,5	18L	102.12114JI							
	M30x2	22L	102.12114JJ					18		
25	M26x1,5	18L	102.12115JI	230Bar	41	*	55	12	*	
	M30x2	22L	102.12115JJ					18		
	M36x2	28L	102.12115JK							
	M45x2	35L	102.12115JM					16		
10	M16x1,5	8S	102.12112KD	300Bar	22	*	32	12	*	Heavy Series
	M18x1,5	10S	102.12112KE							
	M20x1,5	12S	102.12112KF							
13	M18x1,5	10S	102.12113KE	300Bar	27	*	38	12	*	
	M20x1,5	12S	102.12113KF							
	M22x1,5	14S	102.12113KG							
	M24x1,5	16S	102.12113KH							
20	M24x1,5	16S	102.12114KH	250Bar	36	*	46	12	*	
	M30x2	20S	102.12114KJ					16		
25	M30x2	20S	102.12115KJ	230Bar	41	*	55	18	*	
	M36x2	25S	102.12115KK							
	M42x2	30S	102.12115KL		46					
	M52x2	38S	102.12115KN		55			20		

102 SERIES
ISO-A

DIN 2353

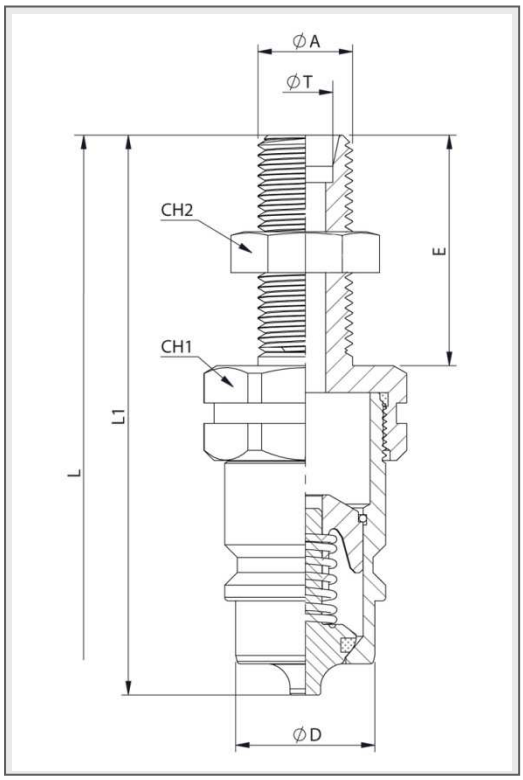

STANDARD MALE MODELS

DN	ØA	ØT	REF.		CH1	CH2	L1	ØD	E	L	
06	M12x1,5	6L	102.11111LB	350Bar	19	19	*	11,8	25	*	Light Series
	M14x1,5	8L	102.11111LC						34		
10	M14x1,5	8L	102.11112LC	300Bar	22	19	*	17,25	34	*	
	M16x1,5	10L	102.11112LD			22			26		
	M18x1,5	12L	102.11112LE						27		
13	M14x1,5	8L	102.11113LC	300Bar	27	19	*	20,56	34	*	
	M16x1,5	10L	102.11113LD			22			35		
	M18x1,5	12L	102.11113LE			24			24		
	M22x1,5	15L	102.11113LG			27			33		
	M26x1,5	18L	102.11113LI			30					
20	M18x1,5	12l	102.11114LE	250Bar	36	24	*	29	26	*	
	M22x1,5	15L	102.11114LG			27			33		
	M26x1,5	18L	102.11114LI			30					
	M30x2	22L	102.11114LJ			36			34		
25	M30x2	22L	102.11115LJ	230Bar	41	36	*	34,3	34	*	
	M36x2	28L	102.11115LK			41					
	M45x2	35L	102.11115LM			55			36		
10	M16x1,5	8S	102.11112MD	300Bar	22	22	*	17,25	27	*	Heavy Series
	M18x1,5	10S	102.11112ME			24					
	M20x1,5	12S	102.11112MF			22					
13	M18x1,5	10S	102.11113ME	300Bar	27	24	*	20,56	24	*	
	M20x1,5	12S	102.11113MF			22			35		
	M22x1,5	14S	102.11113MG			27					
	M24x1,5	16S	102.11113MH			30					
20	M24x1,5	16S	102.11114MH	250Bar	36	30	*	29	29	*	
	M30x2	20S	102.11114MJ			36			36		
25	M30x2	20S	102.11115MJ	230Bar	41	36	*	34,3	35	*	
	M36x2	25S	102.11115MK			41			38		
	M42x2	30S	102.11115ML			50			40		
	M52x2	38S	102.11115MN			65					

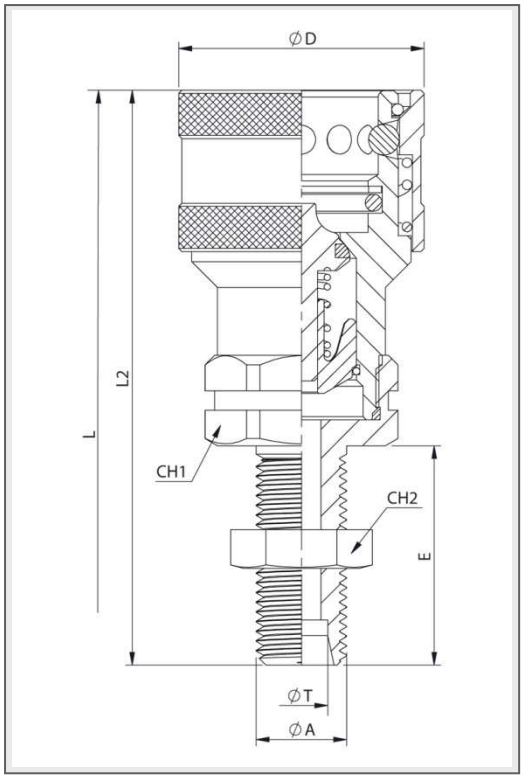

STANDARD FEMALE MODELS

DN	ØA	ØT	REF.		CH1	CH2	L2	ØD	E	L	
06	M12x1,5	6L	102.12111LB	350Bar	19	19	*	11,8	25	*	Light Series
	M14x1,5	8L	102.12111LC						34		
10	M14x1,5	8L	102.12112LC	300Bar	22	19	*	17,25	34	*	
	M16x1,5	10L	102.12112LD			22			26		
	M18x1,5	12L	102.12112LE						27		
13	M14x1,5	8L	102.12113LC	300Bar	27	19	*	20,56	34	*	
	M16x1,5	10L	102.12113LD			22			35		
	M18x1,5	12L	102.12113LE			24			24		
	M22x1,5	15L	102.12113LG			27			33		
	M26x1,5	18L	102.12113LI			30					
20	M18x1,5	12l	102.12114LE	250Bar	36	24	*	29	26	*	
	M22x1,5	15L	102.12114LG			27			33		
	M26x1,5	18L	102.12114LI			30					
	M30x2	22L	102.12114LJ			36			34		
25	M30x2	22L	102.12115LJ	230Bar	41	36	*	34,3	34	*	
	M36x2	28L	102.12115LK			41					
	M45x2	35L	102.12115LM			55			36		
10	M16x1,5	8S	102.12112MD	300Bar	22	22	*	17,25	27	*	Heavy Series
	M18x1,5	10S	102.12112ME			24					
	M20x1,5	12S	102.12112MF			22					
13	M18x1,5	10S	102.12113ME	300Bar	27	24	*	20,56	24	*	
	M20x1,5	12S	102.12113MF			22			35		
	M22x1,5	14S	102.12113MG			27					
	M24x1,5	16S	102.12113MH			30					
20	M24x1,5	16S	102.12114MH	250Bar	36	30	*	29	29	*	
	M30x2	20S	102.12114MJ			36			36		
25	M30x2	20S	102.12115MJ	230Bar	41	36	*	34,3	35	*	
	M36x2	25S	102.12115MK			41			38		
	M42x2	30S	102.12115ML			50			40		
	M52x2	38S	102.12115MN			65					

102 SERIES
ISO-A

MULTI -THREADS

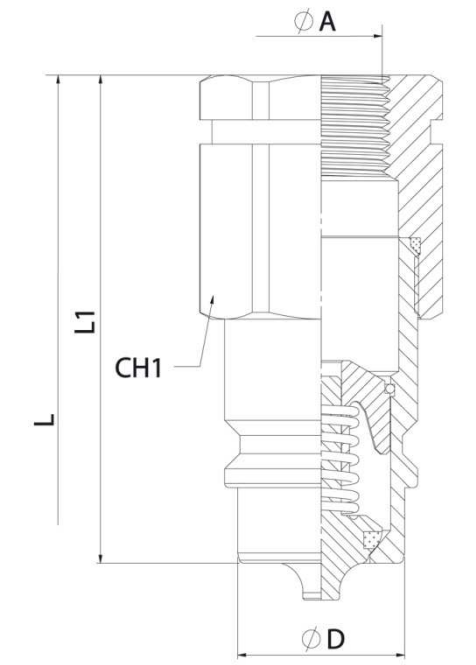

MALE

DN	CH1	L1	ØD	L
06	19	*	11,8	*
10	22	*	17,25	*
13	27	*	20,56	*
20	36	*	29	*
25	41	*	34,3	*

STANDARD MODELS

DN	ØA	MALE	FEMALE	
06	¼" BSP	102.11111AB	102.12111AB	350Bar
	¼" NPTF	102.11111BB	102.12111BB	
	M14x1,5	102.11111NC	102.12111NC	
10	¼" BSP	102.11112AB	102.12112AB	300Bar
	⅜" BSP	102.11112AC	102.12112AC	
	⅜" NPTF	102.11112BC	102.12112BC	
	M16x1,5	102.11112ND	102.12112ND	
13	⅜" BSP	102.11113AC	102.12113AC	
	½" BSP	102.11113AD	102.12113AD	
	½" NPTF	102.11113BD	102.12113BD	
	M18x1,5	102.11113NE	102.12113NE	
	M22x1,5	102.11113NG	102.12113NG	
	¾" -16ORB	102.11113GF	102.12113GF	
	⅞" -14ORB	102.11113GH	102.12113GH	
20	¾" BSP	102.11114AE	102.12114AE	230Bar
	¾" NPTF	102.11114BE	102.12114BE	
	M22x1,5	102.11114NG	102.12114NG	
25	¾" BSP	102.11115AE	102.12115AE	230Bar
	1" BSP	102.11115AF	102.12115AF	
	1" NPTF	102.11115BF	102.12115BF	

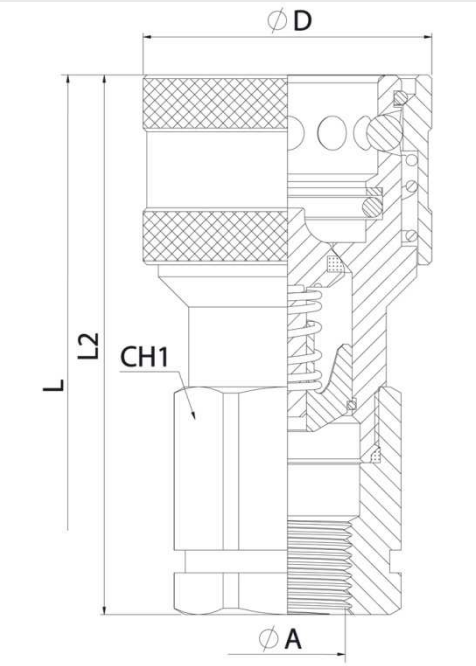

FEMALE

DN	CH1	L2	ØD	L
06	19	*	26	*
10	22	*	32	*
13	27	*	38	*
20	36	*	46	*
25	41	*	55	*

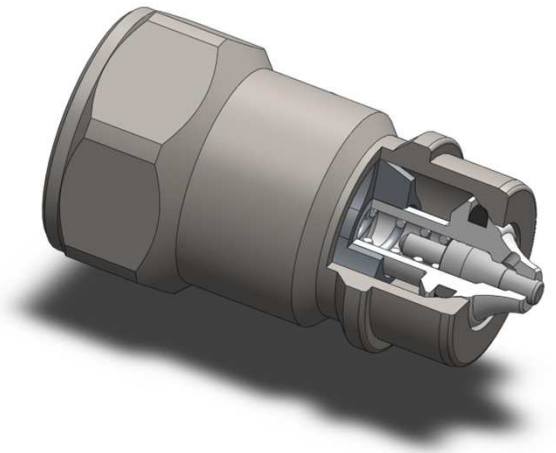

C.U.R.P. connection is available in DN13 Up to 300 Bar.

103 SERIES
ISO-B

CARBON STEEL / AISI 316 / BRASS

Manufactured according to ISO 7241-B norm.
Poppet Valve closing system.
BSP, NPTF, SAE/ORB threads. Other threads available upon request.

• Materials

	CARBON STEEL	STAINLESS STEEL	BRASS
Body	*Carbon Steel EN-10277-3*	*AISI 316*	*Brass CuZn39Pb3*
Seals	*NBR, Viton or EPDM*	*NBR, Viton or EPDM*	*NBR, Viton or EPDM*
Back-up-ring	*PTFE*	*PTFE*	*PTFE*
Balls	*AISI 1010/1015*	*AISI316 W. 14401*	*AISI316 W. 14401*
Springs	*Carbon Steel DIN 17233/84(B)*	*AISI302 DIN 17224*	*AISI302 DIN 17224*

• Applications:
Designed for Oil hydraulic Applications according to European Directive 97.23.EC

• Equivalence

FASTER H — AEROQUIP FD45
PARKER 60 — SNAP-TITE 72

• Working temperature (Seals)

	NBR	Viton	EPDM
	+100ºC	+200ºC	+150ºC
	-30ºC	-10ºC	-40ºC

• Sectors

Carbon Steel → Industrial.

Stainless Steel → Chemical, Industrial, Offshore.

MODEL STRUCTURE

Example;

103.22112 BC

Series	Material	Part	Closing	O-Ring	Size	Thread
103.	**1** → Carbon ST **2** → AISI 316 **4** → Brass	**1** → Male **2** → Female	**0** → Without **1** → Poppet V. **2** → Ball **3** → C.U.R.P.*	**0** → Without **1** → NBR **2** → Viton **3** → EPDM		2 letters (see Table of Threads page 999-1)

	DN
0→ ⅛"	04
1→ ¼"	06
2→ ⅜"	10
3→ ½"	13
4→ ¾"	20
5→ 1"	25
7→1 ½"	40
8 → 2"	50

* **DN13 available only.**

103 SERIES ISO-B

CARBON STEEL

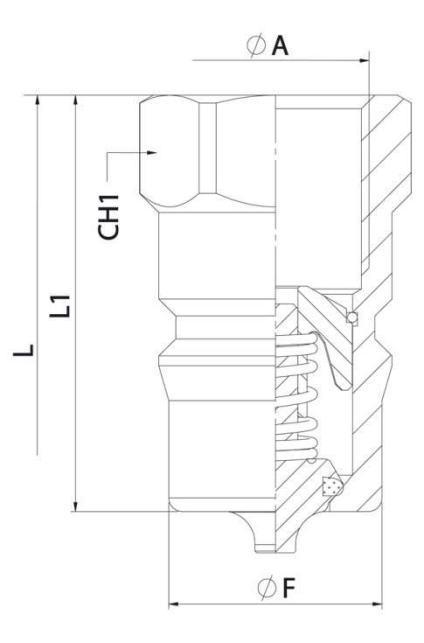

MALE

DN	CH1	L1	ØF	L
04	14	30	10,90	60
06	19	36	14,20	72
10	24	40,50	19,10	81
13	27	46	23,55	92
20	36	56	31,45	112
25	41	63	37,80	126

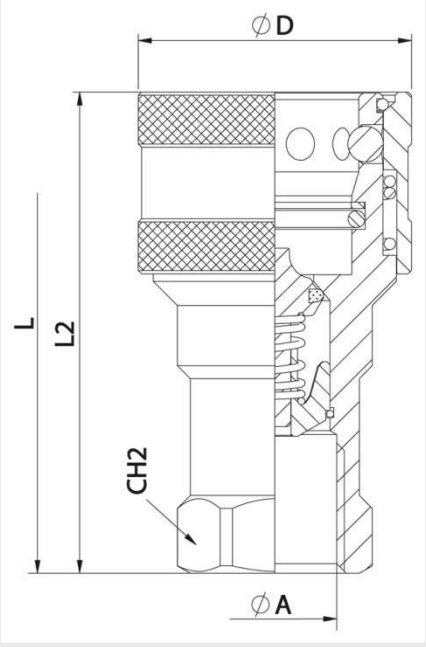

FEMALE

DN	CH2	L2	ØD	L
04	14	49	22	60
06	19	57,70	27	72
10	24	65,50	35	81
13	27	74	42	92
20	36	90	52	112
25	41	103	60	126

STANDARD *CARBON STEEL* MODELS

DN	ØA	MALE	FEMALE	
04	⅛" BSP	103.11110AA	103.12110AA	400Bar
	⅛" NPTF	103.11110BA	103.12110BA	
06	¼" BSP	103.11111AB	103.12111AB	380Bar
	¼" NPTF	103.11111BB	103.12111BB	
10	⅜" BSP	103.11112AC	103.12112AC	350Bar
	⅜" NPTF	103.11112BC	103.12112BC	
	¾"-16ORB	103.11112GF	103.12112GF	
13	½" BSP	103.11113AD	103.12113AD	320Bar
	½" NPTF	103.11113BD	103.12113BD	
	¾" - 16ORB	103.11113GF	103.12113GF	
	⅞" 14ORB	103.11113GH	103.12113GH	
20	¾" BSP	103.11114AE	103.12114AE	300Bar
	¾" NPTF	103.11114BE	103.12114BE	
	1 1/16"-12ORB	103.11114GK	103.12114GK	
25	1" BSP	103.11115AF	103.12115AF	280Bar
	1" NPTF	103.11115BF	103.12115BF	
	1 5/16"-12ORB	103.11115GO	103.12115GO	

103 SERIES
ISO-B

CARBON STEEL

TECHNICAL DATA

DN	Rated Flow	Min Burst Pressure (bar)			Max. Working Pressure *
		Male	Female	Coupled	
04	7 l/m	1650	1750	1600	400 bar
06	15 l/m	1650	1800	1520	380 bar
10	35 l/m	1580	1580	1400	350 bar
13	47 l/m	1310	1450	1280	320 bar
20	93 l/m	1310	1380	1200	300 bar
25	118 l/m	1200	1400	1120	280 bar
40	480 l/m	550	560	560	140 bar
50	890 l/m	370	410	400	100 bar

* Safety factor 1:4
Data of Carbon Steel models

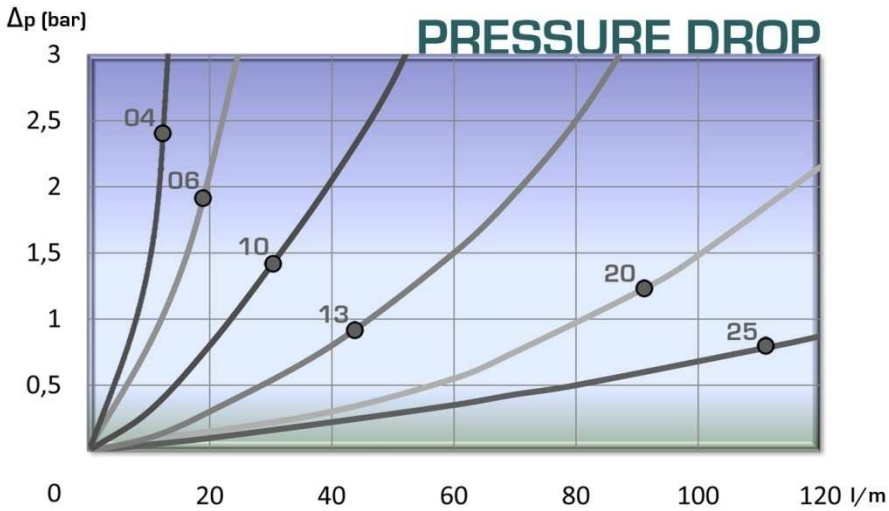

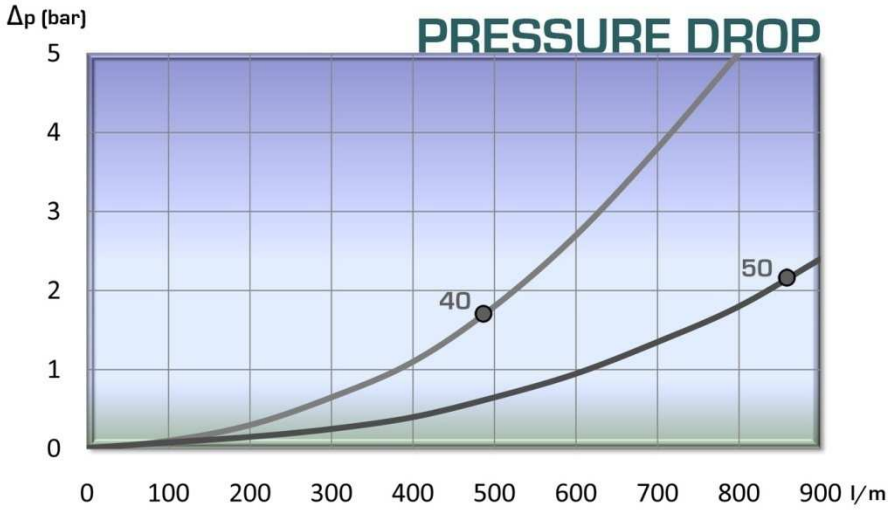

103 SERIES
ISO-B

AISI 316

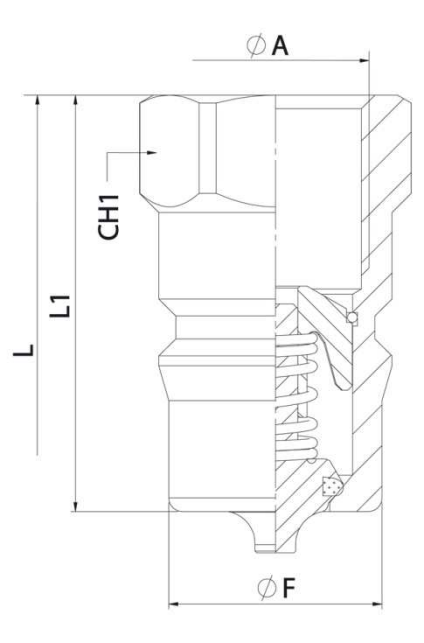

MALE

DN	CH1	L1	ØF	L
04	14	30	10,90	60
06	19	36	14,20	72
10	24	40,50	19,10	81
13	27	46	23,55	92
20	36	56	31,45	112
25	41	63	37,80	126

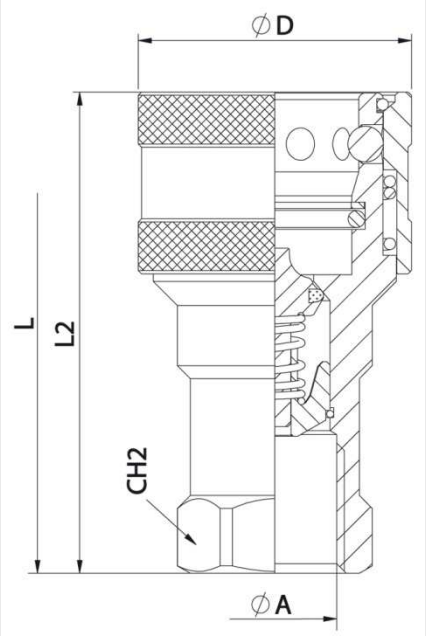

FEMALE

DN	CH2	L2	ØD	L
04	14	49	22	60
06	19	57,70	27	72
10	24	65,50	35	81
13	27	74	42	92
20	36	90	52	112
25	41	103	60	126

STANDARD *AISI 316* MODELS

DN	ØA	MALE	FEMALE	
04	⅛" BSP	103.21120AA	103.22120AA	320Bar
	⅛" NPTF	103.21120BA	103.22120BA	
06	¼" BSP	103.21121AB	103.22121AB	280Bar
	¼" NPTF	103.21121BB	103.22121BB	
10	⅜" BSP	103.21122AC	103.22122AC	260Bar
	⅜" NPTF	103.21122BC	103.22122BC	
	¾"-16ORB	Upon request		
13	½" BSP	103.21123AD	103.22123AD	260Bar
	½" NPTF	103.21123BD	103.22123BD	
	¾" - 16ORB	Upon request		
	⅞" 14ORB	Upon request		
20	¾" BSP	103.21124AE	103.22124AE	210Bar
	¾" NPTF	103.21124BE	103.22124BE	
	1 1/16"-12ORB	Upon request		
25	1" BSP	103.21125AF	103.22125AF	210Bar
	1" NPTF	103.21125BF	103.22125BF	
	1 5/16"-12ORB	Upon request		

103 SERIES
ISO-B

STAINLESS STEEL

TECHNICAL DATA

DN	Rated Flow	Min. Burst Pressure (Bar)			Max. Working Pressure (Bar)
		Male	Female	Coupled	Safety Factor 1:4
04	7 l/min	1300	1300	1325	320
06	15 l/min	1150	1200	1250	280
10	35 l/min	1060	1075	1200	260
13	47 l/min	1050	1150	1200	260
20	93 l/min	855	875	900	210
25	118 l/min	850	875	900	210
40	480 l/min	480	500	600	120
50	890 l/min	405	415	550	100

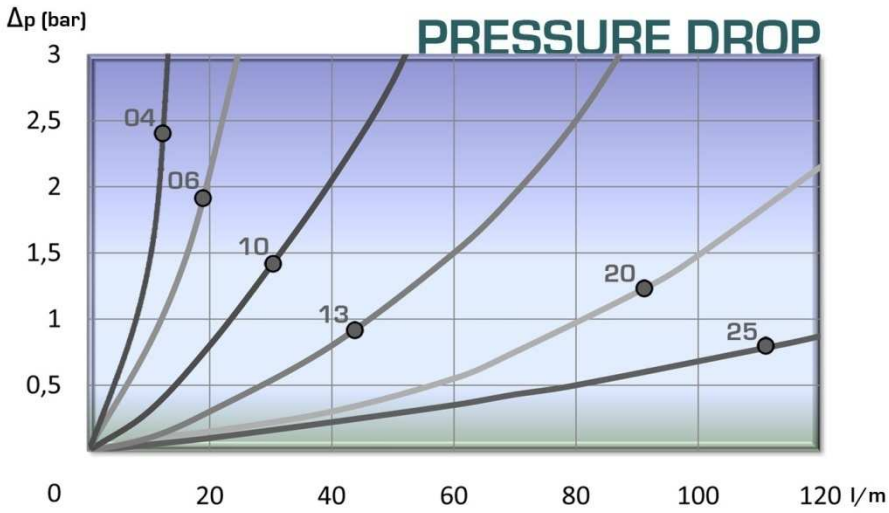

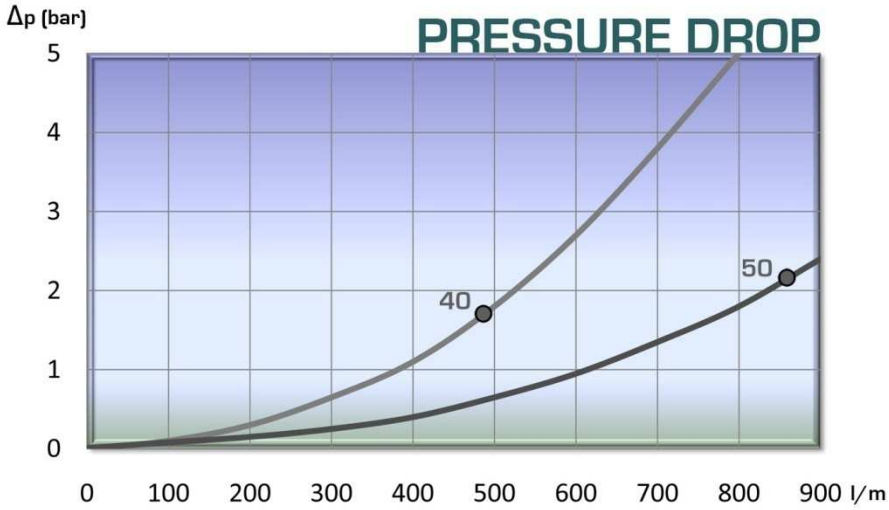

103 SERIES
ISO-B BRASS

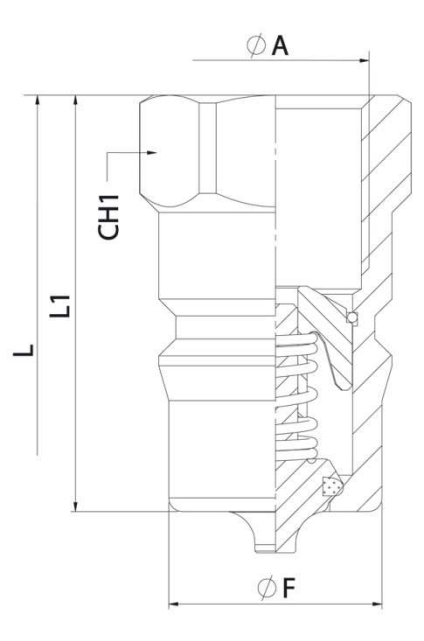

MALE

DN	CH1	L1	ØF	L
04	14	30	10,90	60
06	19	36	14,20	72
10	24	40,50	19,10	81
13	27	46	23,55	92
20	36	56	31,45	112
25	41	63	37,80	126

STANDARD *BRASS* MODELS

DN	ØA	MALE	FEMALE	
04	⅛" BSP	103.41120AA	103.42120AA	250Bar
	⅛" NPTF	103.41120BA	103.42120BA	
06	¼" BSP	103.41121AB	103.42121AB	200Bar
	¼" NPTF	103.41121BB	103.42121BB	
10	⅜" BSP	103.41122AC	103.42122AC	200Bar
	⅜" NPTF	103.41122BC	103.42122BC	
	¾"-16ORB	Upon request		
13	½" BSP	103.41123AD	103.42123AD	200Bar
	½" NPTF	103.41123BD	103.42123BD	
	¾" - 16ORB	Upon request		
	⅞" 14ORB	Upon request		
20	¾" BSP	103.41124AE	103.42124AE	150Bar
	¾" NPTF	103.41124BE	103.42124BE	
	1 1/16"-12ORB	Upon request		
25	1" BSP	103.41125AF	103.42125AF	150Bar
	1" NPTF	103.41125BF	103.42125BF	
	1 5/16"-12ORB	Upon request		

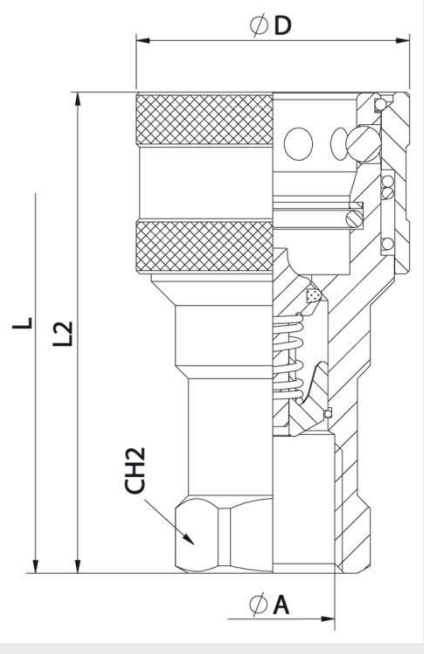

FEMALE

DN	CH2	L2	ØD	L
04	14	49	22	60
06	19	57,70	27	72
10	24	65,50	35	81
13	27	74	42	92
20	36	90	52	112
25	41	103	60	126

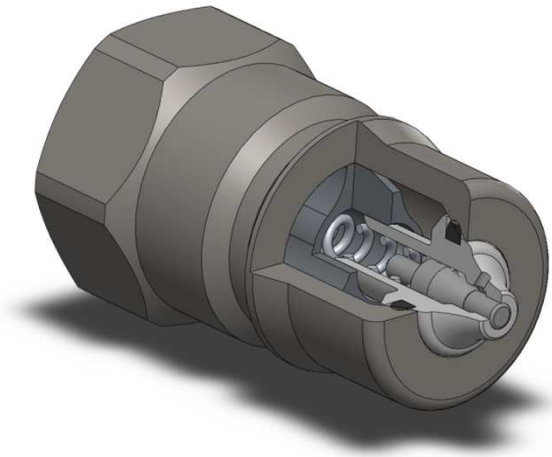

C.U.R.P. connection is available in DN13 Up to 300 Bar.

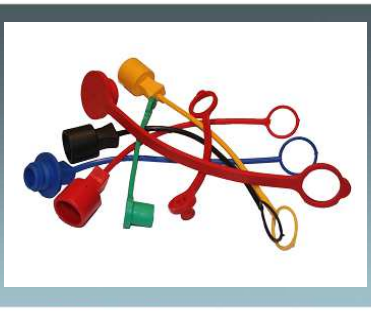

103 SERIES
ISO-B

PLUGS & CAPS

ISO B SERIES PLUGS/ CAPS have been designed to protect FEMALE (coupler) or MALE (nipple) parts while they are disconnected.
Manufacured according to ISO 7241-B norm

MODEL STRUCTURE

Example;

103.5321 AA

Series	Material	Part	Colour	Size	Type
103.	**5** → Plastic	**3** → Plug **4** → Cap	**1** → Red **2** → Blue **3** → Yellow **4** → Green **5** → Black **6** → White		AA

	DN
1 → ¼"	06
2 → ⅜"	10
3 → ½"	13
4 → ¾"	20
5 → 1"	25

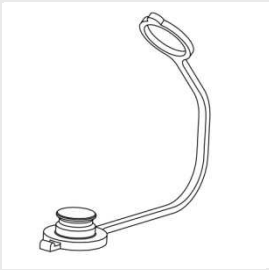

PLUG

DN	RED	BLUE	YELLOW	GREEN	BLACK	WHITE
04	*	103.5320AA	*	*	*	*
06	*	103.5321AA	*	*	*	*
10	*	103.5322AA	*	*	*	*
13	*	103.5323AA	*	*	*	*
20	*	103.5324AA	*	*	*	*
25	*	103.5325AA	*	*	*	*

CAP

DN	RED	BLUE	YELLOW	GREEN	BLACK	WHITE
04	*	103.5420AA	*	*	*	*
06	*	103.5421AA	*	*	*	*
10	*	103.5422AA	*	*	*	*
13	*	103.5423AA	*	*	*	*
20	*	103.5424AA	*	*	*	*
25	*	103.5425AA	*	*	*	*

* NOT AVAILABLE

103 SERIES
ISO-B

DN 40 / DN 50
SIZES

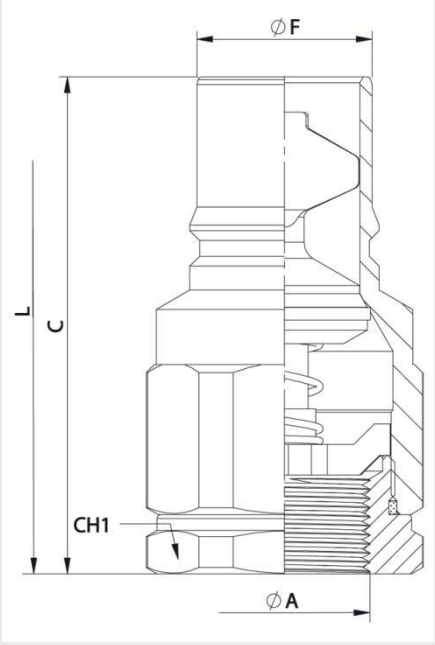

MALE

DN	CH1	C	ØF	L
40	65	126	44,4	252
50	90	131	63,27	262

STANDARD *CARBON STEEL* MODELS

DN	ØA	MALE	FEMALE	
40	1 ¼" BSP	103.11117AG	103.12117AG	140Bar
	1 ¼" NPTF	103.11117BG	103.12117BG	
	1 ½" BSP	103.11117AH	103.12117AH	
	1 ½" NPTF	103.11117BH	103.12117BH	
50	2" BSP	103.11118AI	103.12118AI	100Bar
	2" NPTF	103.11118BI	103.12118BI	
	2 ½" BSP	103.11118AJ	103.12118AJ	
	2 ½" NPTF	103.11118BJ	103.12118BJ	
	3" BSP	103.11118AK	103.12118AK	
	3" NPTF	103.11118BK	103.12118BK	

STANDARD S*TAINLESS STEEL* MODELS

DN	ØA	MALE	FEMALE	
40	1 ¼" BSP	103.21127AG	103.22127AG	120Bar
	1 ¼" NPTF	103.21127BG	103.22127BG	
	1 ½" BSP	103.21127AH	103.22127AH	
	1 ½" NPTF	103.21127BH	103.22127BH	
50	2" BSP	103.21128AI	103.22128AI	100Bar
	2" NPTF	103.21128BI	103.22128BI	
	2 ½" BSP	103.21128AJ	103.22128AJ	
	2 ½" NPTF	103.21128BJ	103.22128BJ	
	3" BSP	103.21128AK	103.22128AK	
	3" NPTF	103.21128BK	103.22128BK	

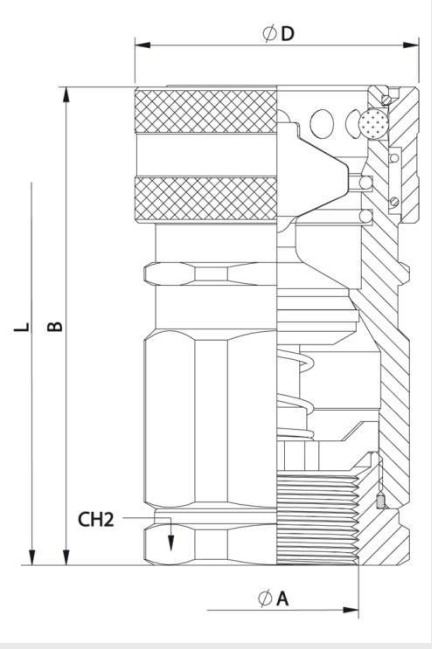

FEMALE

DN	CH2	B	ØD	L
40	65	126,8	75	252
50	90	131	105	262

STANDARD *BRASS* MODELS

DN	ØA	MALE	FEMALE	
40	1 ¼" BSP	103.41127AG	103.42127AG	85 Bar
	1 ¼" NPTF	103.41127BG	103.42127BG	
	1 ½" BSP	103.41127AH	103.42127AH	
	1 ½" NPTF	103.41127BH	103.42127BH	
50	2" BSP	103.41128AI	103.42128AI	
	2" NPTF	103.411208BI	103.42128BI	
	2 ½" BSP	103.41128AJ	103.42128AJ	
	2 ½" NPTF	103.41128BJ	103.42128BJ	
	3" BSP	103.41128AK	103.42128AK	
	3" NPTF	103.41128BK	103.42128BK	

103 SERIES
ISO-B

PLUGS & CAPS

ISO B SERIES PLUGS/ CAPS have been designed to protect FEMALE (coupler) or MALE (nipple) parts while they are disconnected.
Manufacured according to ISO 7241-B norm.

MODEL STRUCTURE

Example;

103.6308 AA

Series	Material	Part	Colour	Size	Type
103.	**6** → Aluminum	**3** → Plug **4** → Cap	**0** → Plain Metal	DN **7** → 1 ½" 40 **8** → 2" 50	AA

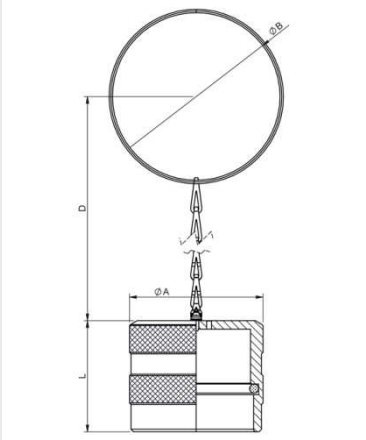

CAP

DN	ØA	REF.	ØB	L	D
40	60	103.6407AA	70	60	609,5
50	78	103.6408AA	98	65	575,5

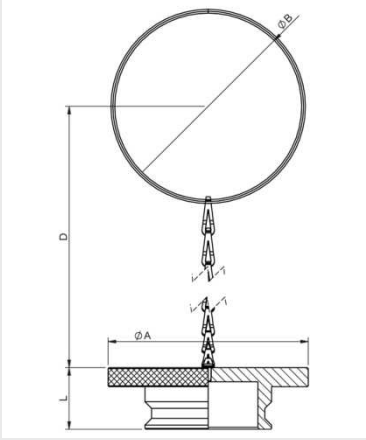

PLUG

DN	ØA	REF.	ØB	L	D
40	75	103.6307AA	68	26	609,5
50	105	103.6308AA	98	32,4	575,5

104 SERIES DIN

Manufactured according to ISO 5675 norm, DN13 size meets also ISO 7241-A requirements.
Poppet Valve or Ball closing system.
BSP, NPTF, SAE/ORB threads. Others available upon request.

• Materials

Body: Carbon Steel EN-10277-3, AISI 303 / AISI 316 / BRASS DIN EN-12164
Seals: *NBR, Viton or EPDM*
Back-Up-Ring: *PTFE*
Balls: *AISI 1010/1015*
Springs: *Carbon Steel DIN 17233/84(B)*

• Applications: Designed for Oil hydraulic Applications according to European Directive 97.23.EC

• Equivalence

FASTER NV-NS
AEROQUIP FD76
PARKER 4000
SNAP-TITE 60

• Working temperature (Seals)

	NBR	Viton	EPDM
	+100ºC	+200ºC	+150ºC
	-30ºC	-10ºC	-40ºC

• Sectors: Industrial, Agricultural

MODEL STRUCTURE

Example;

104.11122 AC

Series	Material	Part	Closing	O-Ring	Size	Thread
104.	**1** → Carbon ST **2** → AISI 316 **3** → AISI 303 **4** → Brass	**1** → Male **2** → Female	**0** → Without **1** → Poppet V. **2** → Ball	**0** → Without **1** → NBR **2** → Viton **3** → EPDM		2 letters (see Table of Threads page 999-1)

	DN
0 → ⅛"	04
1 → ¼"	06
2 → ⅜"	10
3 → ½"	13
4 → ¾"	20
5 → 1"	25

104 SERIES DIN

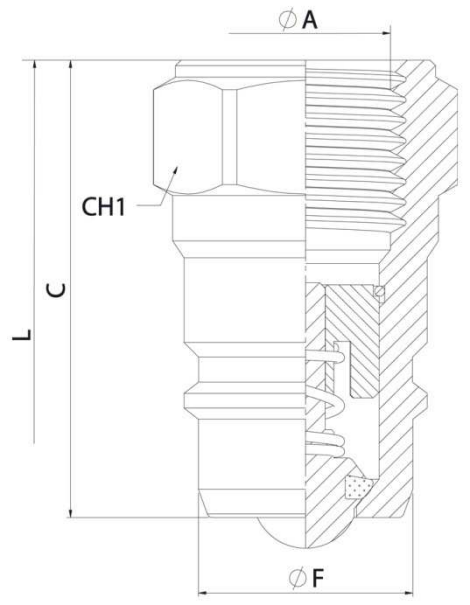

MALE

DN	CH1	C	ØF	L
06	19	36	14,20	72
10	24	40,50	18,95	81
13	27	46	20,56	87,50
		48		89,50
	30	50		91,50
20	36	56	27,95	112
25	41	63	31,30	126

STANDARD MODELS (POPPET)

DN	ØA	MALE	FEMALE	
06	¼" BSP	104.11111AB	104.12111AB	350Bar
	¼" NPTF	104.11111BB	104.12111AB	
	9/16" 18ORB	104.11111GC	104.12111GC	
10	⅜" BSP	104.11112AC	104.12112AC	300Bar
	⅜" NPTF	104.11112BC	104.12112BC	
13	½" BSP	101.11113AD	101.12113AD	300Bar
	½" NPTF	101.11113BD	101.12113BD	
	¾" - 16ORB	101.11113GF	101.12113GF	
	⅞"- 14ORB	101.11113GH	101.12113GH	
20	¾" BSP	104.11114AE	104.12114AE	250Bar
	¾" NPTF	104.11114BE	104.12114BE	
25	1" BSP	104.11115AF	104.12115AF	220Bar
	1" NPTF	104.11115BF	104.12115BF	

Manufactured according to ISO 5675 norm

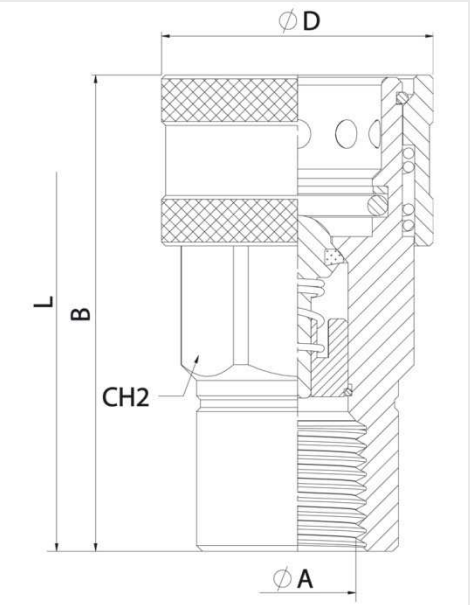

FEMALE

DN	CH2	B	ØD	L
06	22	53,50	27	72
10	27	61	35	81
13	30	63,50	38	87,50
				89,50
				91,50
20	38	85	48	112
25	46	96,50	55	126

STANDARD MODELS (BALL)

DN	ØA	MALE	FEMALE	
06	¼" BSP	104.11211AB	104.12211AB	350Bar
	¼" NPTF	104.11211BB	104.12211AB	
	9/16" 18ORB	104.11211GC	104.12211GC	
10	⅜" BSP	104.11212AC	104.12212AC	300Bar
	⅜" NPTF	104.11212BC	104.12212BC	
13	½" BSP	101.11213AD	101.12213AD	300Bar
	½" NPTF	101.11213BD	101.12213BD	
	¾" - 16ORB	101.11213GF	101.12213GF	
	⅞"- 14ORB	101.11213GH	101.12213GH	
20	¾" BSP	104.11214AE	104.12214AE	250Bar
	¾" NPTF	104.11214BE	104.12214BE	
25	1" BSP	104.11215AF	104.12215AF	220Bar
	1" NPTF	104.11215BF	104.12215BF	

Manufactured according to ISO 5675 norm

104 SERIES DIN

TECHNICAL DATA

DN	Rated Flow	Min Burst Pressure (bar)			Max. Working Pressure *
		Male	Female	Coupled	
06	15 l/m	1650	1800	1400	350 bar
10	35 l/m	1250	1350	1200	300 bar
13	45 l/m	1200	1300	1200	300 bar
20	74 l/m	1030	1200	1000	250 bar
25	100 l/m	950	980	920	220 bar

* Safety factor 1:4
Data of Carbon Steel models

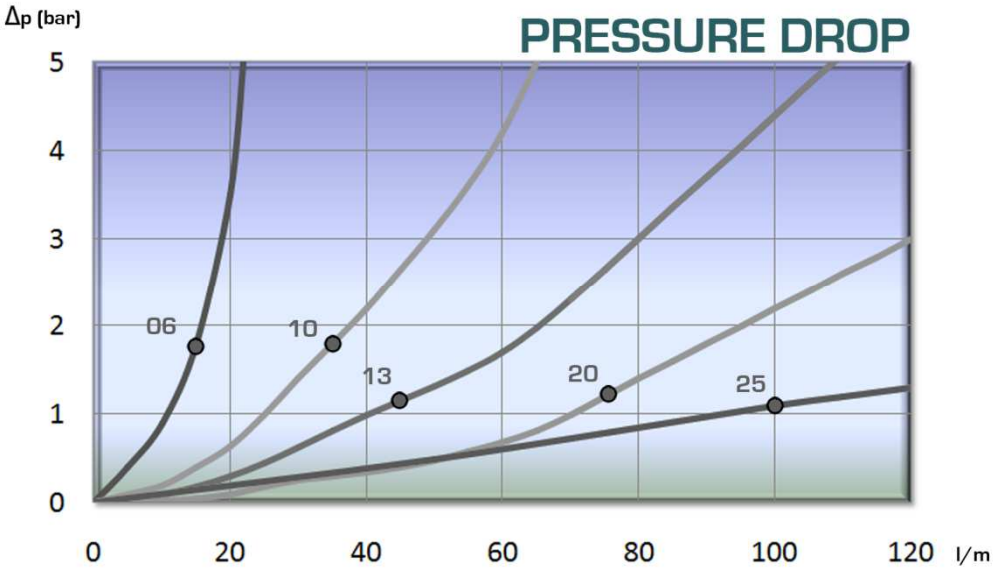

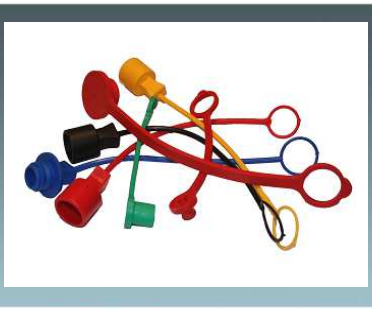

104 SERIES DIN

PLUGS & CAPS

DIN SERIES PLUGS/ CAPS have been designed to protect FEMALE (coupler) or MALE (nipple) parts while they are disconnected.
They have been manufactured according to ISO 5675 norm, DN13 size meets also ISO7241-A requirements

MODEL STRUCTURE

For plugs and caps

Example;

104.5353 AA

Series	Material	Part	Colour	Size	Standard
104. 140.	**1** → Carbon ST **5** → Plastic	**3** → Plug **4** → Cap **5** → Parking	**0** → Plain Metal **1** → Red **2** → Blue **3** → Yellow **4** → Green **5** → Black **6** → White		AA

		DN
1→	¼”	06
2→	⅜”	10
3→	½”	13
4→	¾”	20
5→	1”	25

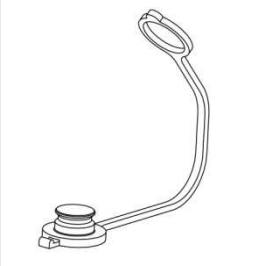

PLUG

DN	RED	BLUE	YELLOW	GREEN	BLACK	WHITE
06	*	*	*	*	104.5351AA	*
10	*	*	*	*	104.5352AA	*
13	*	*	*	*	101.5353AA	*
20	*	*	*	*	104.5354AA	*
25	*	*	*	*	104.5355AA	*

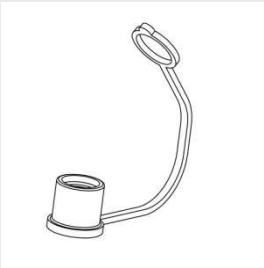

CAP

DN	RED	BLUE	YELLOW	GREEN	BLACK	WHITE
06	*	*	*	*	104.5451AA	*
10	*	*	*	*	104.5452AA	*
13	*	*	*	*	101.5453AA	*
20	*	*	*	*	104.5454AA	*
25	*	*	*	*	104.5455AA	*

* NOT AVAILABLE

104 SERIES DIN

PARKINGS

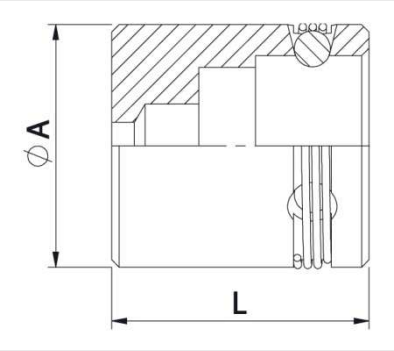

PARKING 3B

DN	REF.	ØA	L
13	101.1533AA	32	34

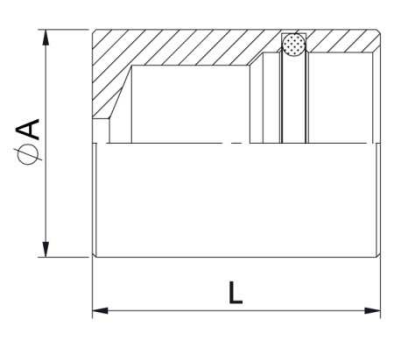

PARKING 1T

DN	REF.	ØA	L
13	101.1533AC	30	38

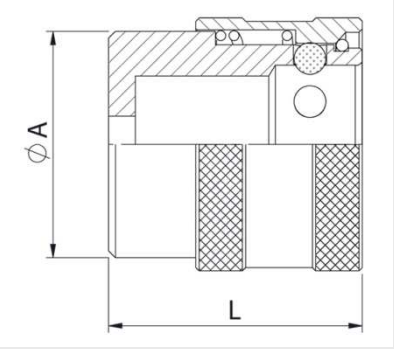

PARKING 6B

DN	REF.	ØA	L
13	101.1533AB	34	38

105 SERIES
PSH

Manufactured according to ISO 7241-A and ISO 5675 norms.
Poppet Valve or Ball closing system.
BSP, NPTF, SAE/ORB threads. Other threads available upon request.

• Materials

Carbon Steel EN -10277-3
Seals: *NBR, Viton or EPDM*
Back-Up-Ring: *PTFE*
Balls: *AISI 1010/1015*
Springs: *Carbon Steel*
DIN 17233/84(B)

• Applications: Designed for Oil hydraulic Applications according to European Directive 97.23.EC

• Equivalence

FASTER PV / CPV
ARGUS SVK
PARKER 4200

• Working temperature (Seals)

	NBR o-rings	Viton o-rings	EPDM o-rings
	+100ºC	+200ºC	+150ºC
	-30ºC	-10ºC	-40ºC

• Sectors: Industrial, Agricultural

MODEL STRUCTURE

Example;

105.11113 BD

Series	Material	Part	Closing	O-Ring	Size	Thread
105.	**1** → Carbon ST	**1** → Male **2** → Female	**0** → Without **1** → Poppet V. **2** → Ball **3** → C.U.R.P.*	**0** → Without **1** → NBR **2** → Viton **3** → EPDM	**3** → ½" | DN 13	2 letters (see Table of Threads page 999-1)

* **DN13 available only.**

105 SERIES
PSH

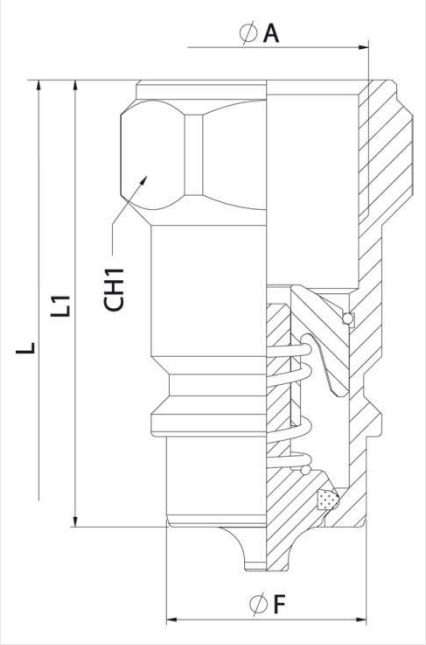

MALE

DN	CH1	L1	ØF	L
13	27	46	20,56	87,50
		48		89,50
	30	50		91,50

STANDARD *MALE* MODELS

DN	ØA	MALE	
13	½" BSP	101.11113AD	300Bar
	½" NPTF	101.11113BD	
	M22x1,5	101.11113NG	
	¾" - 16ORB	101.11113GF	
	⅞" 14ORB	101.11113GH	

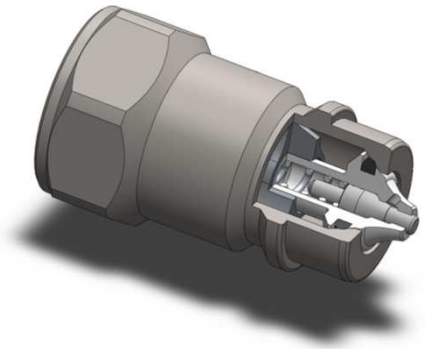

C.U.R.P. connection is available in DN13 Up to 300 Bar.

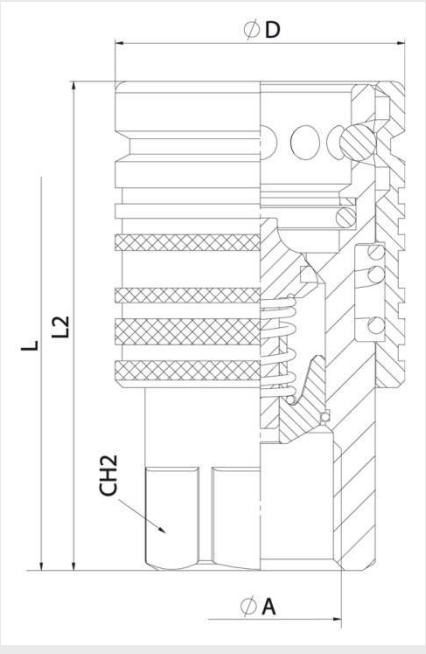

FEMALE

DN	CH2	L2	ØD	L
13	27	63,50	37,80	87,50

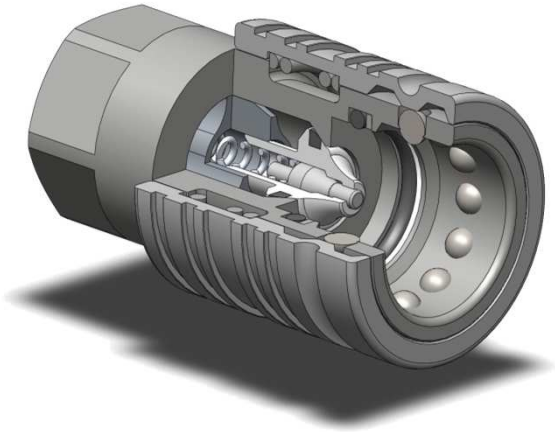

STANDARD *FEMALE* MODELS

DN	ØA	FEMALE	
13	½" BSP	105.12113AD	300Bar
	½" NPTF	105.12113BD	
	M22x1,5	105.12113NG	

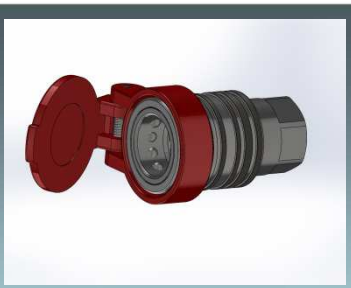

105 SERIES
PSH

PLUGS & CAPS

PSH SERIES PLUGS/ CAPS have been designed to protect FEMALE (coupler) or MALE (nipple) parts while they are disconnected.
Manufacured according to ISO 7241-A norm, DN13 size meets as well ISO 5675 requirements.

MODEL STRUCTURE

For plugs/caps and parking parts

Example;

105.5413 AA

Series	Material	Part	Colour	Size	Standard
101. 105.	**1** → Carbon ST **5** → Plastic	**3** → Plug **4** → Cap **5** → Parking	**0** → Plain Metal **1** → Red **2** → Blue **3** → Yellow **4** → Green **5** → Black **6** → White	**2** → ⅜" (DN 10) **3** → ½" (DN 13)	AA

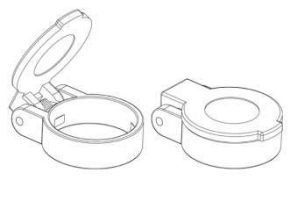

CAP

DN	RED	BLUE	YELLOW	GREEN	BLACK	WHITE
10	105.5412AA	*	*	*	*	*
13	105.5413AA	*	*	*	*	*

PLUG

DN	RED	BLUE	YELLOW	GREEN	BLACK	WHITE
10	101.5312AA	*	*	*	*	*
13	101.5313AA	*	*	*	*	*

CAP

DN	RED	BLUE	YELLOW	GREEN	BLACK	WHITE
10	101.5412AA	*	*	*	*	*
13	101.5413AA	*	*	*	*	*

** Other colors available upon request.*

105 SERIES
PSH

PARKINGS

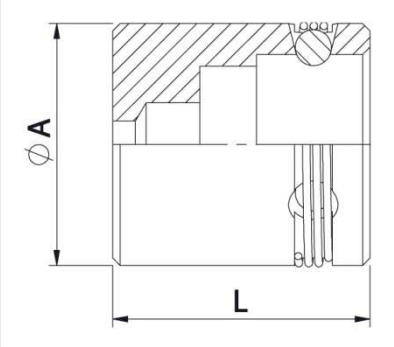

PARKING 3B

DN	REF.	ØA	L
13	101.1533AA	32	34

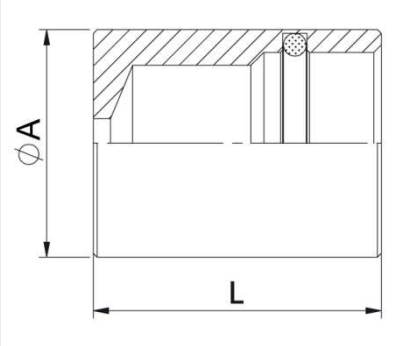

PARKING 1T

DN	REF.	ØA	L
13	101.1533AC	30	38

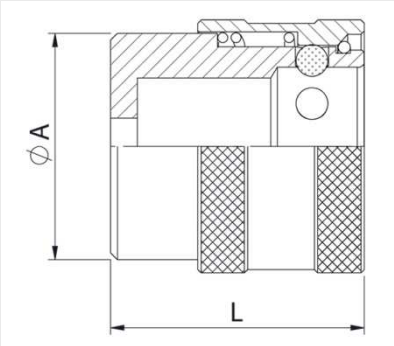

PARKING 6B

DN	REF.	ØA	L
13	101.1533AB	34	38

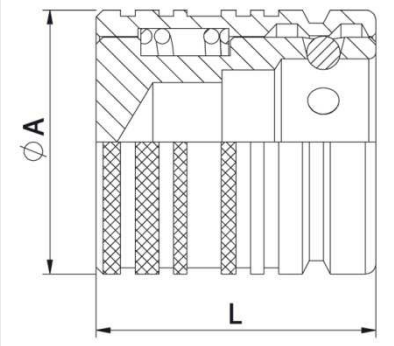

PARKING PSH

DN	REF.	ØA	L
13	105.1533AA	37,80	40

106 SERIES DIA

Manufactured according to ISO 5675 norm.
Special product for American market.
Poppet Valve or Ball closing system.
BSP, NPTF, SAE/ORB threads. Other threads available upon request.

• Materials

Carbon Steel EN -10277-3
Seals: *NBR, Viton or EPDM*
Back-Up-Ring: *PTFE*
Balls: *AISI 1010/1015*
Springs: *Carbon Steel*
DIN 17233/84(B)

• Working temperature (Seals)

	NBR	Viton	EPDM
	+100ºC	+200ºC	+150ºC
	-30ºC	-10ºC	-40ºC

• Applications:

Designed for Oil hydraulic Applications according to European Directive 97.23.EC
Special for American market

• Sectors: Industrial, Agricultural

• Equivalence

FASTER NV-NS
AEROQUIP FD76
PARKER 4000
SNAP-TITE 60

MODEL STRUCTURE

Example;

106.11114 BE

Series	Material	Part	Closing	O-Ring	Size	Thread
106.	**1** → Carbon ST	**1** → Male **2** → Female	**0** → Without **1** → Poppet V. **2** → Ball	**0** → Plain metal **1** → NBR **2** → Viton **3** → EPDM	**4** → ¾" | DN 20	2 letters (see Table of Threads page 999-1)

106 SERIES DIA

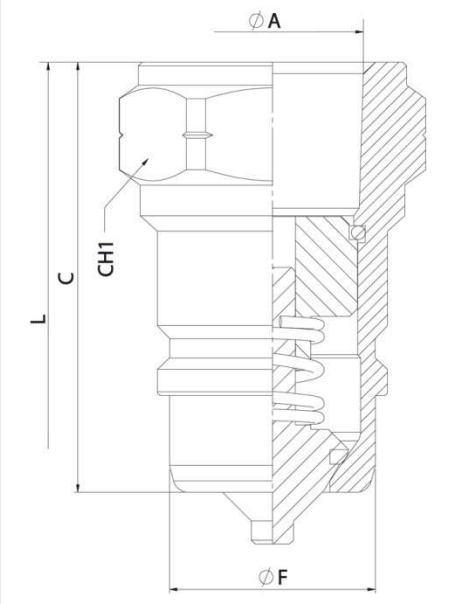

STANDARD MALE MODEL

DN	ØA	REF.		CH1	C	ØD	L
20	¾" NPTF	106.11114BE	250Bar	36	56	26,85	112
20	¾" NPTF	106.11214BE*	250Bar	36	56	26,85	112

* Ball Valve Style

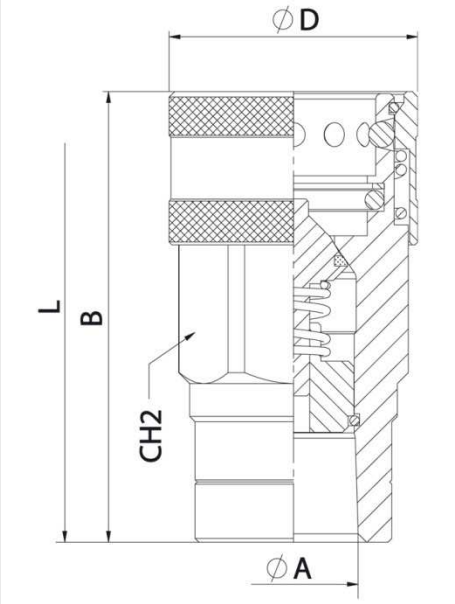

STANDARD FEMALE MODEL

DN	ØA	REF.		CH2	B	ØF	L
20	¾" NPTF	106.12114BE	250Bar	38	82	45,50	112
20	¾" NPTF	106.12214BE*	250Bar	38	82	45,50	112

* Ball Valve Style

107 SERIES PSM

DIN2353 Threads
DIN2353 Bulkhead
DIN3852 BSP/NPTF/ORB

Manufactured according to ISO 7241-A and ISO 5675 norms.
Poppet Valve or Ball closing system.
DIN2353 threads. Other threads available upon request.

• Materials

Carbon Steel EN -10277-3
Seals: *NBR*
Back-Up-Ring: *PTFE*
Balls: *AISI 1010/1015*
Springs: *Carbon Steel*
DIN 17233/84(B)

• Working temperature (Seals)

	NBR	Viton	EPDM
	+100ºC	+200ºC	+150ºC
	-30ºC	-10ºC	-40ºC

• Applications: Designed for Oil hydraulic Applications according to European Directive 97.23.EC

• Sectors: Industrial, Agricultural

• Equivalence

FASTER PV 9 CPV
ARGUS SVK
PARKER 4200

MODEL STRUCTURE

Example;

107.12113 KF

Series	Material	Part	Closing	O-Ring	Size	Thread
102. (only males) Or 107. (only females)	**1** → Carbon ST	**1** → Male **2** → Female	**0** → Without **1** → Poppet V. **2** → Ball **3** → C.U.R.P.*	**0** → Without **1** → NBR **2** → Viton **3** → EPDM	DN **2** → 10 ⅜" **3** → 13 ½"	2 letters (see Table of Threads page 999-1)

* **DN13 available only.**

107 SERIES PSM

DIN2353
Threads

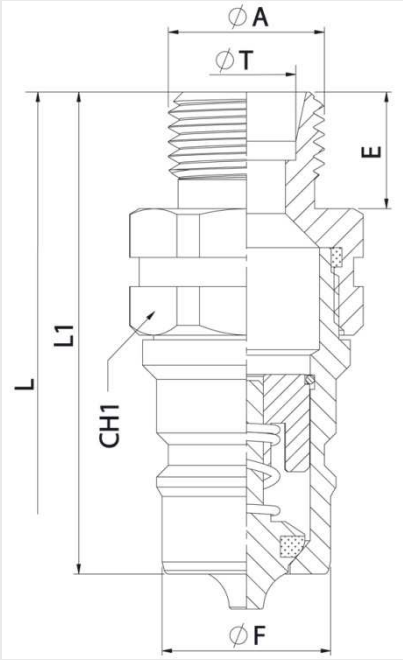

MALE

DN	CH1	L1	ØF	L	E
10	22	49,57	17,30	97,07	12
13	27	56	20,56	105,80	12
	30	79		151,80	35

* DN10 MALE drawing

STANDARD MALE MODELS

DN	ØA	ØT	REF.	
10	M12x1,5	6L	102.11112JB	270Bar
	M14x1,5	8L	102.11112JC	
	M16x1,5	10L	102.11112JD	
	M18x1,5	12L	102.11112JE	
	M16x1,5	8S	102.11112KD	
	M18x1,5	10S	102.11112KE	
	M20x1,5	12S	102.11112KF	
	⅜" BSP	-	102.11112AN	
13	M14x1,5	8L	102.11113JC	250Bar
	M16x1,5	10L	102.11113JD	
	M18x1,5	12L	102.11113JE	
	M22x1,5	15L	102.11113JG	
	M26x1,5	18L	102.11113JI	
	M18x1,5	10S	102.11113KE	
	M20x1,5	12S	102.11113KF	
	M22x1,5	14S	102.11113KG	
	M24x1,5	16S	102.11113KH	
	M30x2	20S	102.11113KJ	

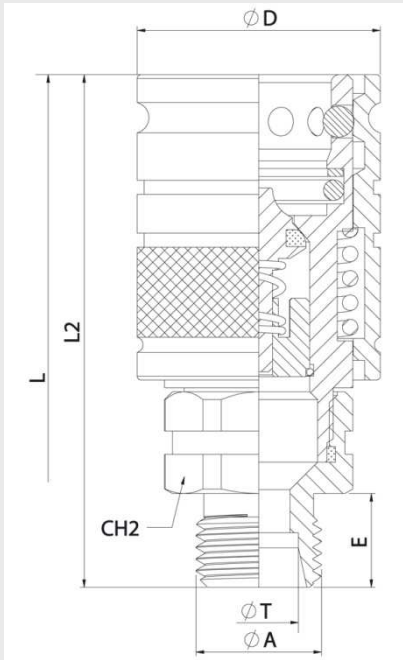

FEMALE

DN	CH2	L2	ØD	L	E
10	22	65,50	31	97,07	12
13	27	71,80	37,80	105,80	12
	30	94,80		151,80	35

* DN10 FEMALE drawing

STANDARD FEMALE MODELS

DN	ØA	ØT	REF.	
10	M12x1,5	6L	107.12112JB	270Bar
	M14x1,5	8L	107.12112JC	
	M16x1,5	10L	107.12112JD	
	M18x1,5	12L	107.12112JE	
	M16X1,5	8S	107.12112KD	
	M18x1,5	10S	107.12112KE	
	M20x1,5	12S	107.12112KF	
	⅜" BSP	-	107.12112AN	
13	M14x1,5	8L	107.12113JC	250Bar
	M16x1,5	10L	107.12113JD	
	M18x1,5	12L	107.12113JE	
	M22x1,5	15L	107.12113JG	
	M26x1,5	18L	107.12113JI	
	M18x1,5	10S	107.12113KE	
	M20x1,5	12S	107.12113KF	
	M22x1,5	14S	107.12113KG	
	M24x1,5	16S	107.12113KH	
	M30x2	20S	107.12113KJ	

107 SERIES
PSM

DIN2353
Bulkhead

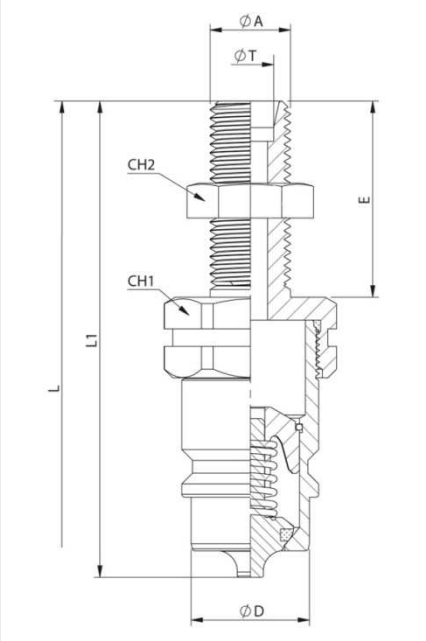

MALE

DN	CH1	CH2	L1	ØD	L
10	22	19	71,57	17,30	141,07
		22			
		24			
13	27	19	78	20,56	149,80
		30	79		151,80
		24	68		129,80
		27	79		151,80
		30	56		105,80
		24	68		129,80
		27	79		151,80
		27	79		151,80
		30	79		151,80
	30	36	79		151,80

* DN13 MALE drawing

STANDARD MALE MODELS

DN	ØA	ØT	REF.	
10	M12x1,5	6L	102.11112LB	270Bar
	M14x1,5	8L	102.11112LC	
	M16x1,5	10L	102.11112LD	
	M18x1,5	12L	102.11112LE	
	M16x1,5	8S	102.11112MD	
	M18x1,5	10S	102.11112ME	
	M20x1,5	12S	102.11112MF	
13	M14x1,5	8L	102.11113LC	250Bar
	M16x1,5	10L	102.11113LD	
	M18x1,5	12L	102.11113LE	
	M22x1,5	15L	102.11113LG	
	M26x1,5	18L	102.11113LI	
	M18x1,5	10S	102.11113ME	
	M20x1,5	12S	102.11113MF	
	M22x1,5	14S	102.11113MG	
	M24x1,5	16S	102.11113MH	
	M30x2	20S	102.11113MJ	

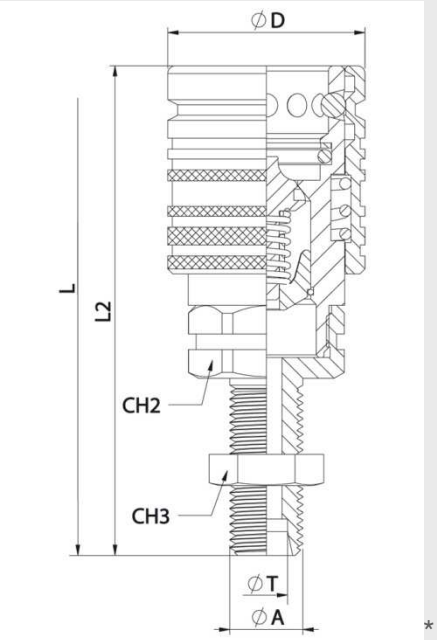

FEMALE

DN	CH2	CH3	L2	ØD	L
10	22	19	87,5	31	141,07
		22			
		24			
13	27	19	78	37,80	149,80
		30	79		151,80
		24	68		129,80
		27	79		151,80
		30	56		105,80
		24	68		129,80
		27	79		151,80
		27	79		151,80
		30	79		151,80
	30	36	79		151,80

* DN13 FEMALE drawing

STANDARD FEMALE MODELS

DN	ØA	ØT	REF.	
10	M12x1,5	6L	107.12112LB	270Bar
	M14x1,5	8L	107.12112LC	
	M16x1,5	10L	107.12112LD	
	M18x1,5	12L	107.12112LE	
	M16x1,5	8S	107.12112MD	
	M18x1,5	10S	107.12112ME	
	M20x1,5	12S	107.12112MF	
13	M14x1,5	8L	107.12113LC	250Bar
	M16x1,5	10L	107.12113LD	
	M18x1,5	12L	107.12113LE	
	M22x1,5	15L	107.12113LG	
	M26x1,5	18L	107.12113LI	
	M18x1,5	10S	107.12113ME	
	M20x1,5	12S	107.12113MF	
	M22x1,5	14S	107.12113MG	
	M24x1,5	16S	107.12113MH	
	M30x2	20S	107.12113MJ	

107 SERIES PSM

DIN 3852
BSP/NPTF/ORB

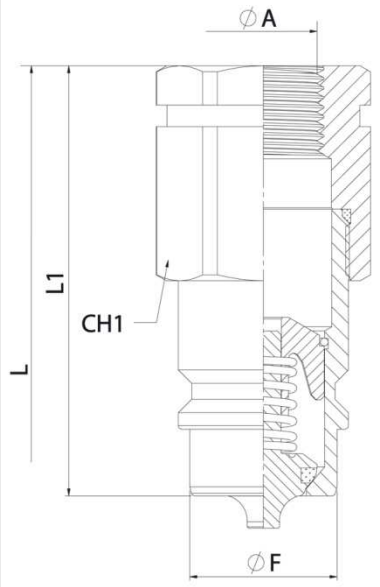

MALE

DN	ØA	CH1	L1	ØF	L
10	¼" BSP	22	50,57	17,30	99,07
	¼" NPTF	22			
	⅜" BSP	22			
	⅜" NPTF	22			
	M16x1,5	22			
	M18x1,5	22			
13	⅜" BSP	27	60	20,56	113,80
	½" BSP	27	60		113,80
	¾" NPTF	30	62		117,80
	M14x1,5	27	60		113,80
	M16x1,5	27	60		113,80
	M18,1,5	27	60		113,80
	M22x1,5	27	62		117,80
	¾" -16ORB	27	60		113,80
	⅞"-14ORB	27	60		113,80
	** ¾" -16ORB*	27	67,20		128,20

* DN13 MALE drawing

STANDARD MALE MODELS

DN	ØA	REF.	
10	¼" BSP	102.11112AB	270Bar
	¼" NPTF	102.11112BB	
	⅜" BSP	102.11112AC	
	⅜" NPTF	102.11112BC	
	M16x1,5	102.11112ND	
	M18x1,5	102.11112NE	
13	⅜" BSP	102.11113AC	250Bar
	½" BSP	102.11113AD	
	¾" NPTF	102.11113BE	
	M14x1,5	102.11113NC	
	M16x1,5	102.11113ND	
	M18x1,5	102.11113NE	
	M22x1,5	102.11113NG	
	¾" -16ORB	102.11113GF	
	⅞"-14ORB	102.11113GH	
	** ¾" -16ORB*	102.11113GFA	

* This reference is habitually provided in the Spanish market, being the head cylindrical instead of 27mm hexagonal.

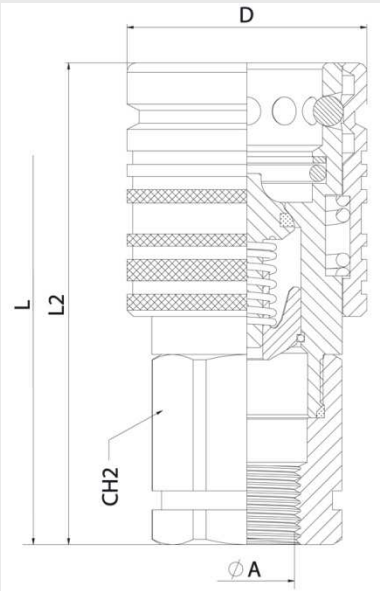

FEMALE

DN	ØA	CH2	L2	ØD	L
10	¼" BSP	22	66,5	31	99,07
	¼" NPTF	22			
	⅜" BSP	22			
	⅜" NPTF	22			
	M16x1,5	22			
	M18x1,5	22			
13	⅜" BSP	27	75,80	37,80	113,80
	½" BSP	27	75,80		113,80
	¾" NPTF	30	77,80		117,80
	M14x1,5	27	75,80		113,80
	M16x1,5	27	75,80		113,80
	M18,1,5	27	75,80		113,80
	M22x1,5	27	77,80		117,80
	¾" -16ORB	27	75,80		113,80
	⅞"-14ORB	27	75,80		113,80
	* ¾" -16ORB	27	83		128,20

* DN13 FEMALE drawing

STANDARD FEMALE MODELS

DN	ØA	REF.	
10	¼" BSP	107.12112AB	270Bar
	¼" NPTF	107.12112BB	
	⅜" BSP	107.12112AC	
	⅜" NPTF	107.12112BC	
	M16x1,5	107.12112ND	
	M18x1,5	107.12112NE	
13	⅜" BSP	107.12113AC	250Bar
	½" BSP	107.12113AD	
	¾" NPTF	107.12113BE	
	M14x1,5	107.12113NC	
	M16x1,5	107.12113ND	
	M18,1,5	107.12113NE	
	M22x1,5	107.12113NG	
	¾" -16ORB	107.12113GF	
	⅞"-14ORB	107.12113GH	
	**** ¾" -16ORB***	107.12113GFA	

* This reference is habitually provided in the Spanish market, being the head cylindrical instead of 27mm hexagonal.

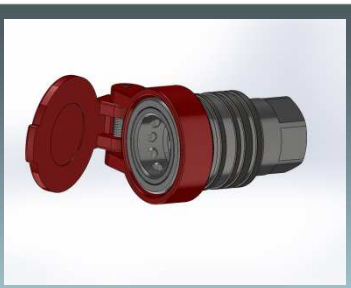

107 SERIES
PSM

PLUGS & CAPS

PSM SERIES PLUGS/CAPS have been designed to protect FEMALE (coupler) or MALE (nipple) parts while they are disconnected.
Manufactured according to ISO 7241-A norm, DN13 size meets also ISO 5675 requirements.

MODEL STRUCTURE

For plugs/caps and parking parts

Example;

105.5413 AA

Series	Material	Part	Colour	Size	Standard
101. 105.	**1** → Carbon ST **5** → Plastic	**3** → Plug **4** → Cap **5** → Parking	**0** → Plain Metal **1** → Red **2** → Blue **3** → Yellow **4** → Green **5** → Black **6** → White	**2** → ⅜" (DN 10) **3** → ½" (DN 13)	AA

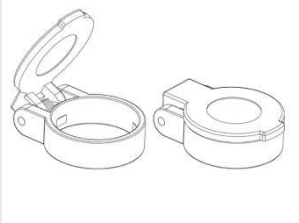

CAP

DN	RED	BLUE	YELLOW	GREEN	BLACK	WHITE
10	105.5412AA	*	*	*	*	*
13	105.5413AA	*	*	*	*	*

PLUG

DN	RED	BLUE	YELLOW	GREEN	BLACK	WHITE
10	101.5312AA	*	*	*	*	*
13	101.5313AA	*	*	*	*	*

CAP

DN	RED	BLUE	YELLOW	GREEN	BLACK	WHITE
10	101.5412AA	*	*	*	*	*
13	101.5413AA	*	*	*	*	*

** Other colors available upon request.*

107 SERIES
PSM

PARKING

PSM SERIES PARKINGS have been designed to protect FEMALE (coupler) or MALE (nipple) parts while they are disconnected. 4 TYPES available in ½", 3B, 1T, 6B and PSH.

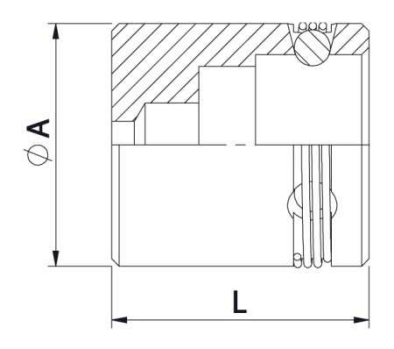

PARKING 3B

DN	REF.	ØA	L
13	101.1533AA	32	34

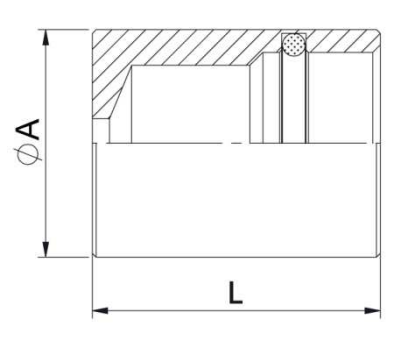

PARKING 1T

DN	REF.	ØA	L
13	101.1533AC	38	30

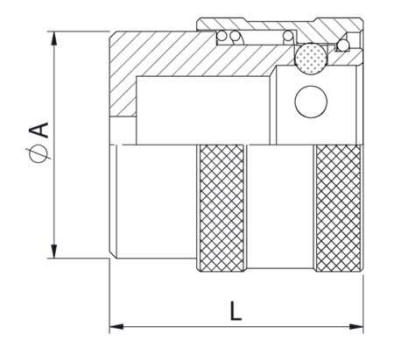

PARKING 6B

DN	REF.	ØA	L
13	101.1533AB	34	38

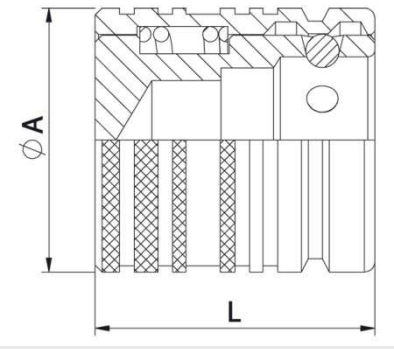

PARKING PSH

DN	REF.	ØA	L
13	105.1533AA	37,50	40

1077 SERIES TNS

Manufactured according to ISO 7241-A and ISO 5675 norms.
Poppet Valve or C.U.R.P. vesión

• Materials

Carbon Steel EN -10277-3
Seals: *NBR*
Back-Up-Ring: *PTFE*
Balls: *AISI 1010/1015*
Springs: *Carbon Steel*
DIN 17233/84(B)

• Working temperature (Seals)

	NBR	Viton	EPDM
	+100ºC	+200ºC	+150ºC
	-30ºC	-10ºC	-40ºC

• Applications:

Designed for Oil hydraulic Applications according to European Directive 97.23.EC

• Equivalence

ISO 7241-A

MODEL STRUCTURE

Example;

1077.12113 OM

Series	Material	Part	Closing	O-Ring	Size	Thread
1077,	**1** → Carbon ST **2** → AISI 316	**2** → Female	**1** → Poppet V. **3** → C.U.R.P.	**1** → NBR **2** → VITON **3** → EPDM	DN **3** → 13 ½"	2 letters (see Table of Threads page 999-1)

SERIE 1077
TNS

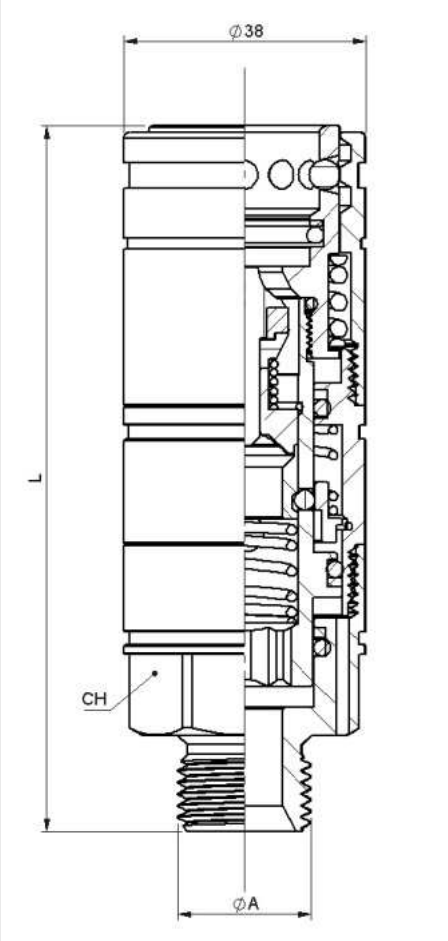

STANDARD MODELS

DN	ØA	F – M THREAD	NORMA	REF.		L	CH1
13	1/2" BSP	FEMALE	DIN 3852-2-X	1077.12113AD	250Bar	107,3	32
	1/2" NPTF		ANSI B1.20.3	1077.12113BD			
	3/4" UNF		SAE J1926-1	1077.12113GF			
	7/8" UNF			1077.12113GH			
	1/2" BSP	MALE	DIN 3852	1077.12113AO		109,3	
	1/2" BSPT						
	3/4" UNF		SAE J1926-2	1077.12113HF		107,5	
	7/8" UNF			1077.12113HH		113,7	
	1 1/16" UN			1077.12113HK		110,8	
	M18x1,5		ISO 6149-2	1077.12113OH		113,3	
	M22x1,5			1077.12113OM		110,8	
	M22x1,5 15L		ISO 8434-1 DIN 2353	1077.12113JG		118	
	M30x2 22L			1077.12113JJ			
	M22x1,5 14S			1077.12113KG			
	M18x1,5 12L	MALE BULKHEAD		1077.12113LE			
	M22X1,5 15L			1077.12113LG		121,5	
	M24x1,5 16S			1077.12113MH			
	3/4" UNF	MALE	ISO 8434-2	1077.12113YF		111,1	
	7/8" UNF			1077.12113YH		115,1	
	3/4" UNF	MALE BULKHEAD		1077.12113YFP		124,8	
	7/8" UNF			1077.12113YHP		128,8	
	13/16" UN	MALE	ISO 8434-3	1077.12113ZG		108,6	
	1" UNS	MALE BULKHEAD		1077.12113ZIP		130,3	
	1 3/16" UN			1077.12113ZMP		136,8	
	M22x1,5	MALE	ISO 9974-2 DIN 3852-11	1077.12113QM		110,3	

Manufactured according to ISO7241-A. These example refereces are without C.U.R.P., conexión under pressure only when the pressure is in the male side.

- When the coupling is connected they can rotate even under pressure, thus avoiding any torsional stress in the flexible hoses.
- Compatible with RSD (Parker) and 3CFPV (Faster).
- Connection with any regular ISO7241-A male.
- Connection under residual pressure when pressure is in the male side.
- Connection under residual pressure in both parts, male and female, in C.U.R.P. version.
- Poppet valve made in hardened carbon steel.
- Push Pull connection.
- Wide range of threads.
- Mechanical block of valves is automatic and prevents return line shut down even at high flow rate.

SERIE 1077
TNS C.U.R.P.

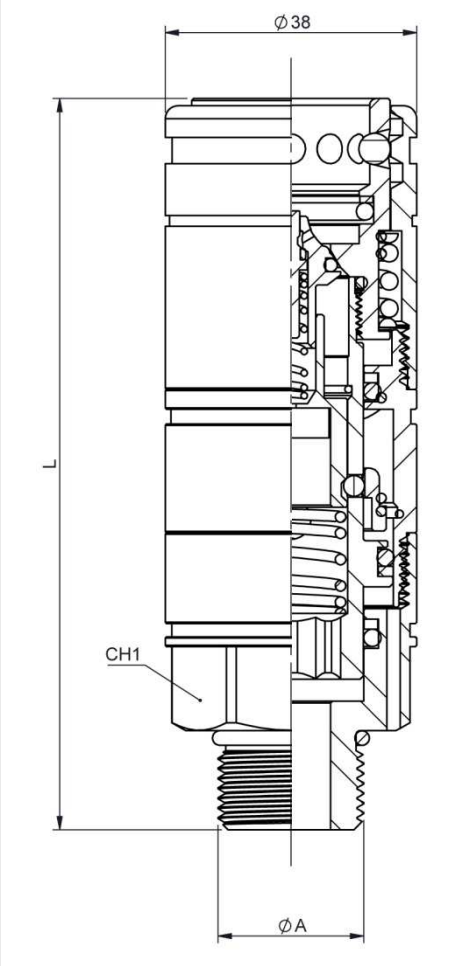

STANDARD MODELS

DN	ØA	F – M THREAD	NORMA	REF.		L	CH1
13	1/2" BSP	FEMALE	DIN 3852-2-X	1077.12313AD	250Bar	107,3	32
	1/2" NPTF		ANSI B1.20.3	1077.12313BD			
	3/4" UNF		SAE J1926-1	1077.12313GF			
	7/8" UNF			1077.12313GH		109,3	
	1/2" BSP	MALE	DIN 3852	1077.12313AO			
	1/2" BSPT			1077.12313DO			
	3/4" UNF		SAE J1926-2	1077.12313HF		107,5	
	7/8" UNF			1077.12313HH		113,7	
	1 1/16" UN			1077.12313HK		110,8	
	M18x1,5		ISO 6149-2	1077.12313OH		113,3	
	M22x1,5			1077.12313OM		110,8	
	M22x1,5 15L		ISO 8434-1 DIN 2353	1077.12313JG		118	
	M30x2 22L			1077.12313JJ			
	M22x1,5 14S			1077.12313KG			
	M18x1,5 12L	MALE BULKHEAD		1077.12313LE			
	M22X1,5 15L			1077.12313LG		121,5	
	M24x1,5 16S			1077.12313MH			
	3/4" UNF	MALE	ISO 8434-2	1077.12313YF		111,1	
	7/8" UNF			1077.12313YH		115,1	
	3/4" UNF	MALE BULKHEAD		1077.12313YFP		124,8	
	7/8" UNF			1077.12313YHP		128,8	
	13/16" UN	MALE	ISO 8434-3	1077.12313ZG		108,6	
	1" UNS	MALE BULKHEAD		1077.12313ZIP		130,3	
	1 3/16" UN			1077.12313ZMP		136,8	
	M22x1,5	MALE	ISO 9974-2 DIN 3852-11	1077.12313QM		110,3	

Manufactured according to ISO7241-A. These example refereces are with C.U.R.P., conexión under pressure.

- When the coupling is connected they can rotate even under pressure, thus avoiding any torsional stress in the flexible hoses.
- Compatible with 4SRPV (Faster).
- Connection with any regular ISO7241-A male.
- Connection under residual pressure when pressure is in the male and female sides.
- Connection under residual pressure in both parts, male and female, in C.U.R.P. version.
- Poppet valve made in hardened carbon steel.
- Push Pull connection.
- Wide range of threads.
- Mechanical block of valves is automatic and prevents return line shut down even at high flow rate.

SERIE 1077
TNS

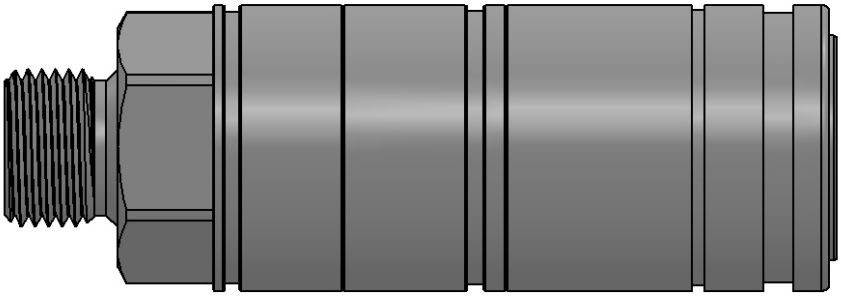

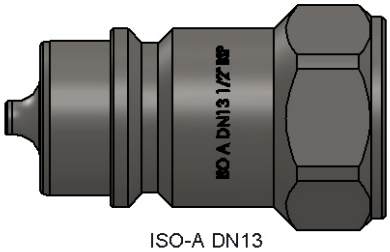

ISO-A DN13

Standard Models						
DN	Thread	REF.	Working Pressure	Flow Rate	Max. Residual Pressure Connection	Spillage
13	½" BSP	1077.12113AD	275 Bar	90 l/min	250 Bar	1,8 cc

TECHNICAL DATA

DN	Rated Flow	Min Burst Pressure (bar)			Max. Working Pressure	Force to Connect
		Male	Female	Coupled	1:4	
13	90 l/min	1200	1300	1325	275	220 N

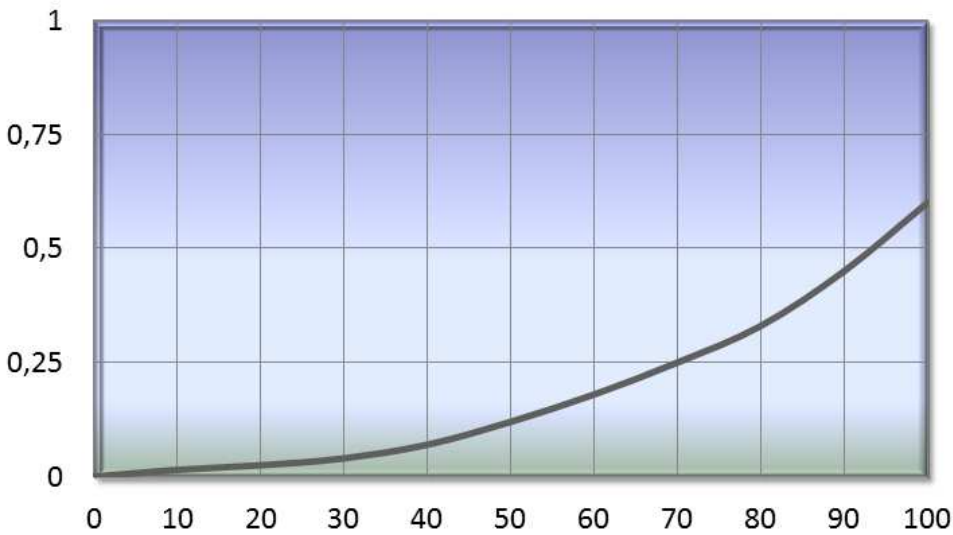

SERIE 109
SMP

Poppet Valve closing system.
BSP, NPTF, SAE/ORB threads. Other threads available upon request.

• Materials

	CARBON STEEL	STAINLESS STEEL
Body	*Carbon Steel EN-10277-3*	*AISI 316*
Seals	*NBR, Viton or EPDM*	*NBR, Viton or EPDM*
Back-up-ring	*PTFE*	*PTFE*
Balls	*AISI 1010/1015*	*AISI316 W. 14401*
Springs	*Carbon Steel DIN 17233/84(B)*	*AISI302 DIN 17224*

• Applications: Designed for Oil hydraulic Applications according to European Directive 97.23.EC

• Equivalence

SM Series

• Working temperature (Seals)

	NBR	Viton	EPDM
	+100ºC	+200ºC	+150ºC
	-30ºC	-10ºC	-40ºC

• Sectors

Carbon Steel → Industrial.

Stainless Steel → Chemical, Industrial, Offshore.

MODEL STRUCTURE

Example;

109.12111 BB

Series	Material	Part	Closing	O-Ring	Size	Thread
109.	**1** → Carbon ST **2** → AISI 316	**1** → Male **2** → Female	**0** → Without **1** → Poppet V. **2** → Ball **3** → C.U.R.P.*	**0** → Without **1** → NBR **2** → Viton **3** → EPDM	**1**→ ¼" DN 06 **3**→ ½" DN 13 **4**→ ¾" DN 20	2 letters (see Table of Threads page 999-1)

SERIE 109
SMP

MALE				
DN	CH1	L1	ØF	L
06	19	38	14,10	76
13	27	46	23,55	92
20	36	56	31,45	112

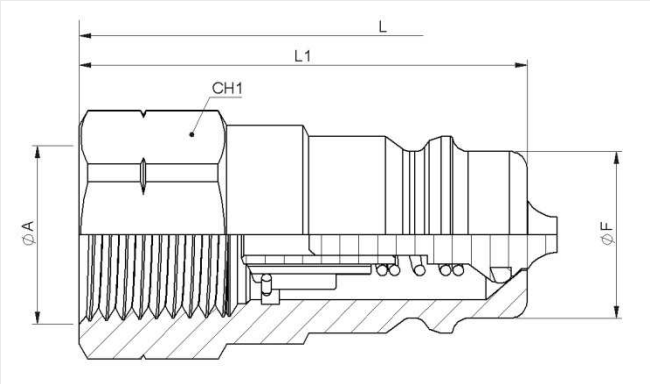

FEMALE				
DN	CH2	L2	ØD	L
06	19	57,70	27	76
13	27	74	42	92
20	36	90	52	112

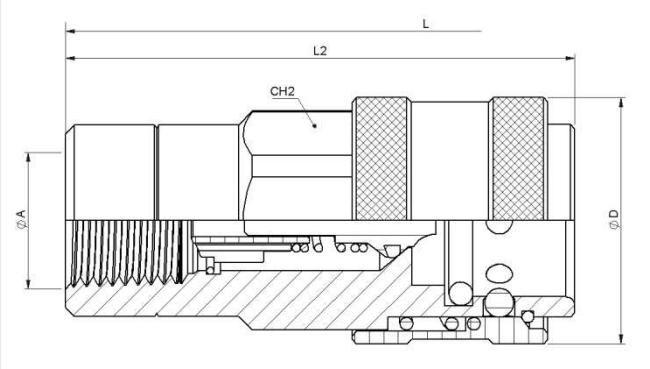

STANDARD *CARBON STEEL* MODELS

DN	ØA	MALE	FEMALE	
06	¼" BSP	109.11111AB	109.12111AB	410Bar
	¼" NPTF	109.11111BB	109.12111BB	
13	½" BSP	109.11113AD	109.12113AD	410Bar
	½" NPTF	109.11113BD	109.12113BD	
	¾" - 16ORB	109.11113GF	109.12113GF	
	⅞" 14ORB	109.11113GH	109.12113GH	
20	¾" BSP	109.11114AE	109.12114AE	310Bar
	¾" NPTF	109.11114BE	109.12114BE	
	1 1/16"-12ORB	109.11114GK	109.12114GK	

SERIE 109
SMP

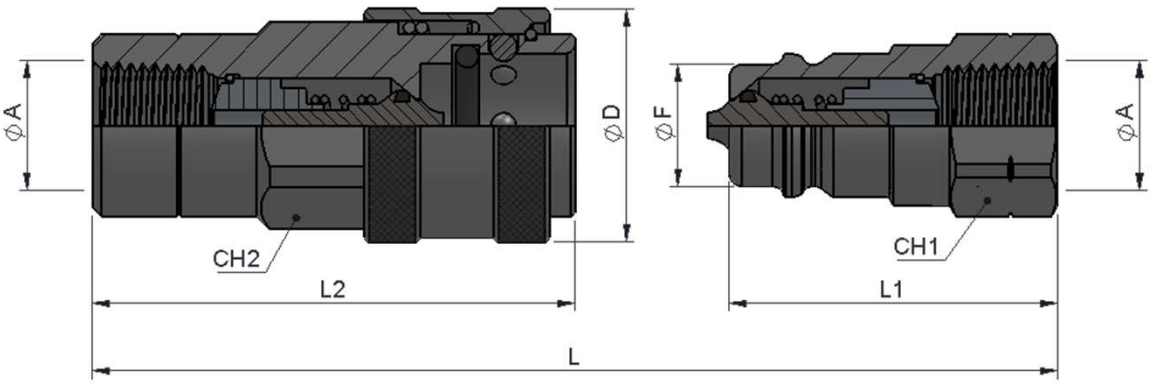

Main dimensions drawing

TECHNICAL DATA

DN	Rated Flow	Min Burst Pressure (bar)			Max. Working Pressure
		Male	Female	Coupled	
06	15 l/m	1500	1600	1300	410 Bar
13	50 l/m	1400	1500	1300	410 Bar
20	110 l/m	1250	1400	1250	310 Bar

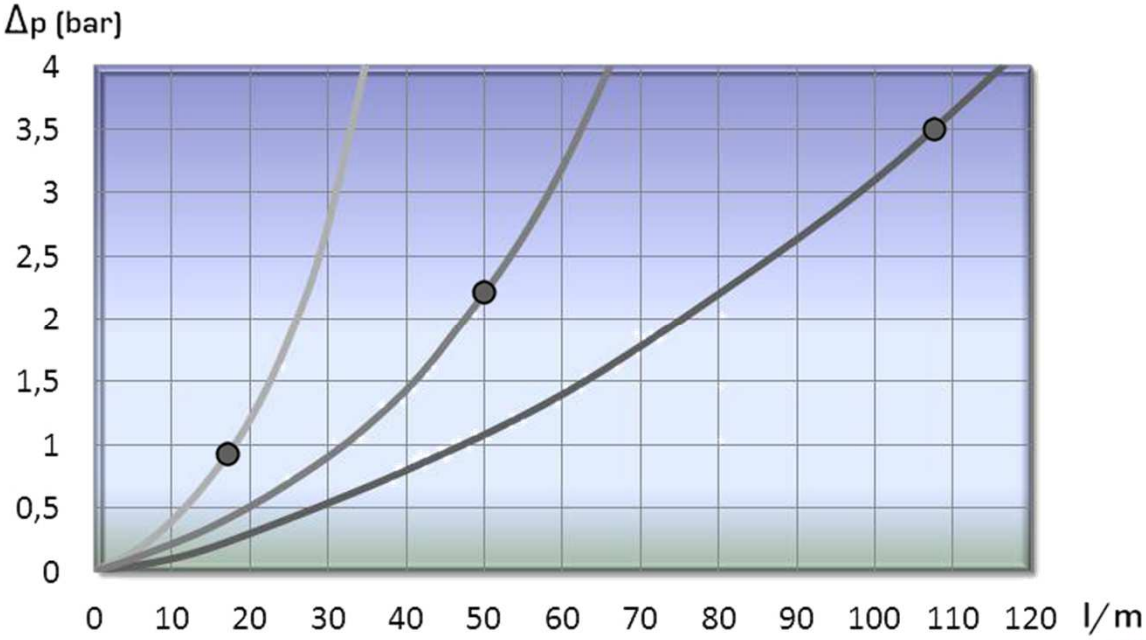

120 SERIES
IFR

DIN 2353, DIN3852 / BSP
DIN 2353 SAE/ORB

Manufactured according ISO 5676 / ISO / TC23 / NFU 16006 norms.
BSP, DIN2353, DIN3852, SAE/ORB threads, other threads available upon request.

• Materials

Carbon Steel EN 10277-3
Seals: NBR, Viton or EPDM
Balls: AISI 316W 14401
Springs: Carbon Steel DIN 17233/84(B)

• Working temperature (Seals)

	NBR	Viton	EPDM
	+100ºC	+200ºC	+150ºC
	-30ºC	-10ºC	-40ºC

• Applications: Designed for Oil hydraulic Applications according to European Directive 97.23.EC

• Sectors: Agricultural

• Equivalence

FASTER VF
GROMELLE Q-9000

MODEL STRUCTURE

Example;

120.11113 JE

Series	Material	Part	Closing	O-Ring	Size	Thread
120.	**1** → Carbon St	**1** → Male **2** → Female	**1** → Poppet V.	**1** → NBR 2 → Viton **3** → EPDM	**3** → ½" (DN 13)	2 letters (see Table of Threads page 999-1)

120 SERIES

IFR

DIN 2353 SAE
DIN 3852 / BSP

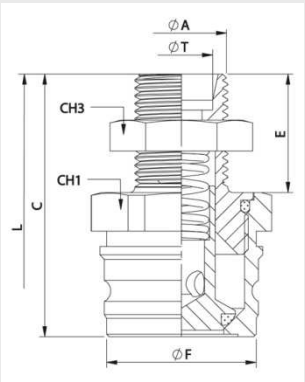

MALE

DN	CH1	CH3	C	ØF	E	L
13	32	24/27	51	29	23	*

• The nut is included in the Bulkhead version

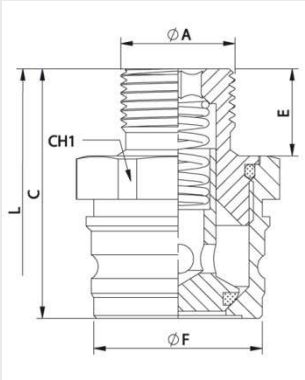

MALE

DN	CH1	C	ØF	E	L
13	32	43	29	15	*

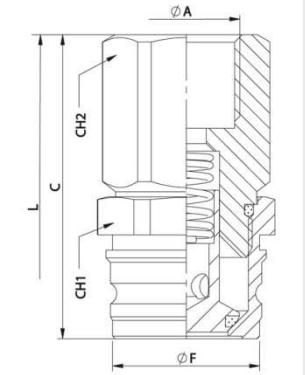

MALE

DN	CH1	CH2	C	ØF	E	L
13	32	24/27	51	29	31	*

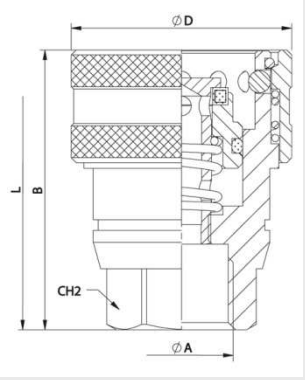

FEMALE

DN	CH2	B	ØD	L
13	27	57	45	*

• Metal parking parts is included in all female parts

• Manufactured according to ISO 5676 / ISO/TC23 NFU 16006 norms.

★SPECIAL OPTIONS:

Male with plastic Cap 120.5433AC incorporated, add to base code 010. (Minimum quantity: 250units)

STANDARD MALE MODELS

DN	ØA	ØT	REF.	
13	M18x1,5	12L	120.11113JE	150Bar
	M20x1,5	Ø13,5	120.11113KFA	
	M22x,15	15L	120.11113JG	
	½" BSP M.	-	120.11113AO	
	½" BSP	-	120.11113AD	
	½" BSP Bulkhead		120.11113CO	

STANDARD FEMALE MODELS

DN	ØA	REF.	
13	⅜" BSP	120.12113AC	150 Bar
	½" BSP	120.12113AD	
	M18x1.5	120.12113NE	
	M20x1.5	120.12113NF	

120 SERIES
IFR

DIN 2353
DIN3852 / BSP

•Manufactured according to ISO 5676 / ISO/TC23 NFU 16006 norms.

SPECIAL OPTIONS:
Male with plastic cap 120.5433AC included, add to base code 010. (Min. quantity: 250units)

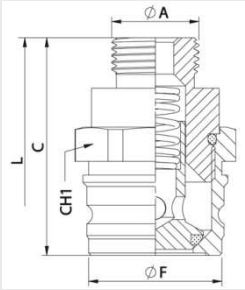

MALE

DN	ØA	CH1	C	ØF	E	L	REF.	
13	¾"-16UNF M. (without 37º cone)	32	47,50	29	19,50	*	120.11113HFA	150Bar

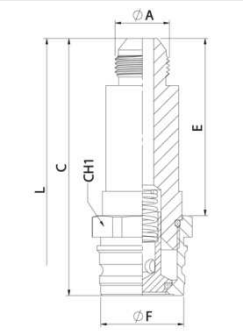

MALE

DN	ØA	CH1	C	ØF	E	L	REF.	
13	¾"-16UNF M. Prolonged	32	90	29	62	*	120.11113GFA	150Bar

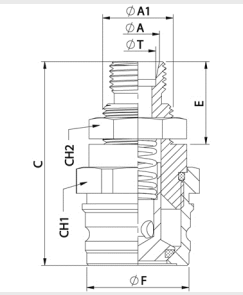

MALE

DN	ØA	ØA1	ØT	CH1	CH2	C	ØF	E	L	REF.	
13	M16x1,5 M20x1,5	M36x2	10L	32	27	54	29	26	*	120.11113JDA	150Bar

• The nut is included in the Bulkhead version

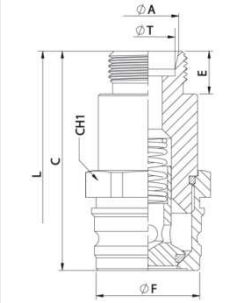

MALE

DN	ØA	ØT	CH1	C	ØF	E	L	REF.	
13	M22x1,5 Prolonged	15L	32	61,50	29	35	*	120.11113JGA	150Bar

• The nut is included in the Bulkhead version

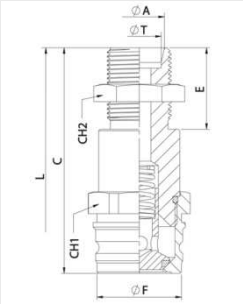

MALE

DN	ØA	ØT	CH1	CH2	C	ØF	E	L	REF.	
13	M22x1,5 Bulkhead Prolonged	15L	32	27	77,50	29	49,50	*	120.11113LGA	150Bar

• The nut is included in the Bulkhead version

120 SERIES
IFR

TECHNICAL DATA

DN	Rated Flow	Min Burst Pressure (bar)			Max. Working Pressure
		Male	Female	Coupled	
13	24 l/m	1360	640	1260	150

* Safety Factor 1:4

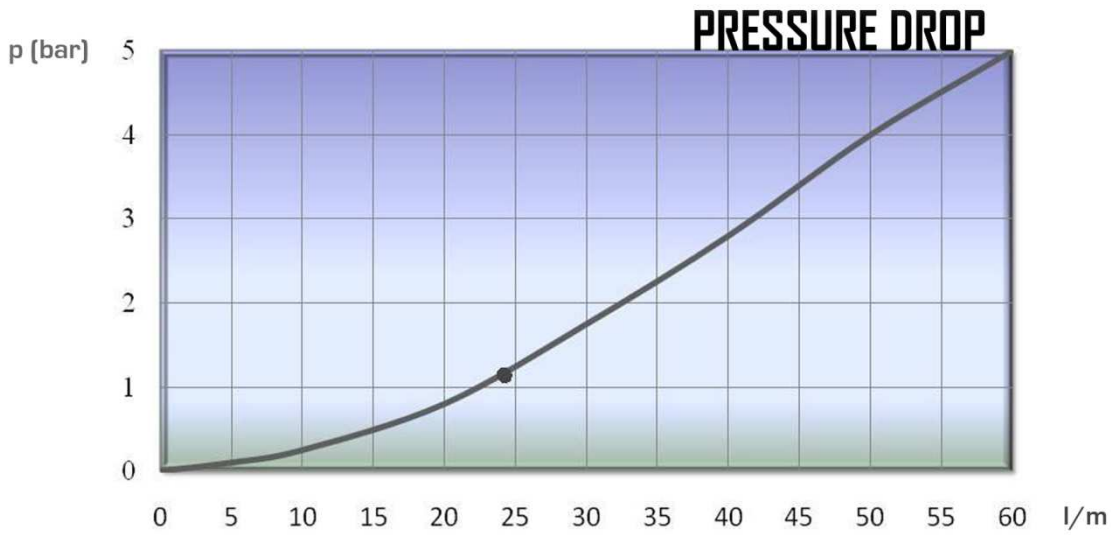

120 SERIES IFR

CAP & PARKING

IFR SERIES CAPS have been designed to protect FEMALE parts during disconnection.
They have been manufactured according to ISO 5675/ ISO/TC23 / NFU16006 requirements.

MODEL STRUCTURE

For caps and parking parts

Example;

120.5433 AA

Series	Material	Part	Colour	Size	Standard
120.	**1** → Carbon ST **5** → Plastic	**4** → Cap **5** → Parking	**0** →Plain Metal **1** →Red **2** →Blue **3** →Yellow **4** →Green **5** →Black **6** →White	DN **3** → ½" | 13	AA

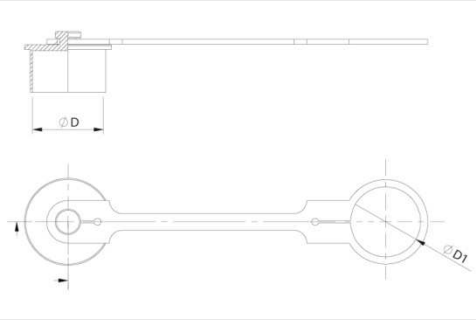

DN	REF.	ØD	ØD1
13	120.5433AA	30	30

Standard in yellow

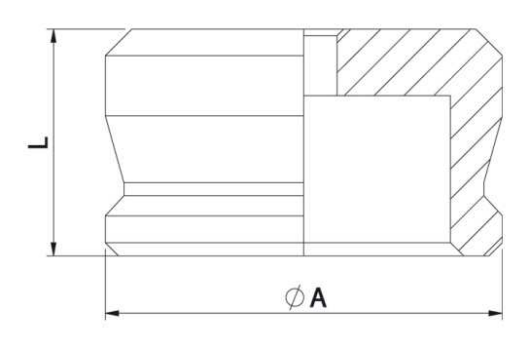

DN	REF.	L	ØA
13	120.1533AA	17	29,80

122 SERIES
AGR

DIN 2353
DIN3852 / BSP

Designed to connect hydraulic systems of tractor and trailer.
BSP, DIN3852, SAE/ORB thread, other available upon request

• Materials

Carbon Steel EN 10277-3
Seals: NBR, Viton or EPDM
Balls: AISI 316W 14401
Springs: Carbon Steel DIN 17233/84(B)

• Working temperature (Seals)

	NBR	Viton	EPDM
	+100ºC	+200ºC	+150ºC
	-30ºC	-10ºC	-40ºC

• Applications: Designed to connect hydraulic systems of a tractor and a trailer. Designed for Oil hydraulic. Applications according to European Directive 97.23.EC

• Sectors: Agricultural

• Equivalence

GROMELLE K-8000

MODEL STRUCTURE

Example;

122.11113 NE

Series	Material	Part	Closing	O-Ring	Size	Thread
122.	**1** → Carbon St	**1** → Male **2** → Female	**1** → Poppet V.	**1** → NBR **2** → Viton **3** → EPDM	**3** → ½" (DN 13)	2 letters (see Table of Threads page 999-1)

122 SERIES
AGR

DIN 2353
DIN3852 / BSP

•Manufactured according to ISO 5676 / ISO/TC23 NFU 16006 norms.

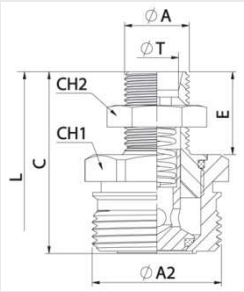

MALE

DN	ØA	ØT	CH1	CH2	C	ØA2	E	L	REF.	
13	M18x1,5	12L	36	24	50,50	36	23	*	122.11113JE	250Bar
	M20x1,5	Ø13,5		27					122.11113KFA	
	M22x1,5	15L							122.11113JG	

• The nut is included in the Bulkhead version

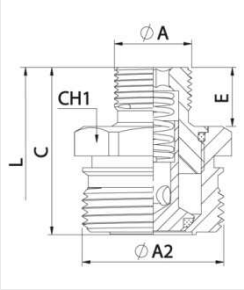

MALE

DN	ØA	CH1	C	ØA2	E	L	REF.	
13	½" BSP M	36	42,50	M36x2	15	*	122.11113AO	250Bar

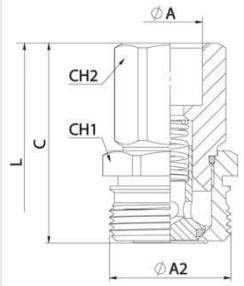

MALE

DN	ØA	CH1	CH2	C	ØA2	L	REF.	
13	½" BSP H	36	30	54	M36x2	*	122.11113AD	250Bar

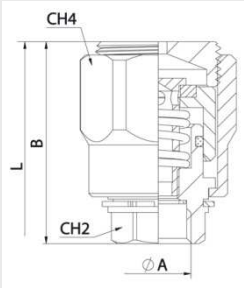

FEMALE

DN	ØA	CH2	CH4	B	L	REF.	
13	M18x1,5	24	41	58,50	*	122.12113NE	250Bar

• The METAL PARKING is included in all female parts.

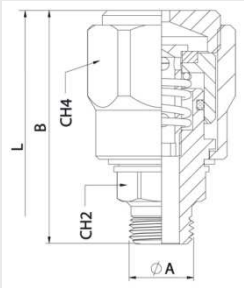

FEMALE

DN	ØA	CH2	CH4	B	L	REF.	
13	½" BSP M Without 60º cone	24	41	42,50	*	122.12113AOA	250Bar

• The METAL PARKING is included in all female parts.

SPECIAL OPTIONS:
Male with plastic cap 120.5433AC included, add to base code 010. (Min. quantity: 250units)

122 SERIES
AGR

DIN 2353
SAE/ORB

SPECIAL OPTIONS:
Male with plastic cap 120.5433AC included, add to base code 010. (Min. quantity: 250units)

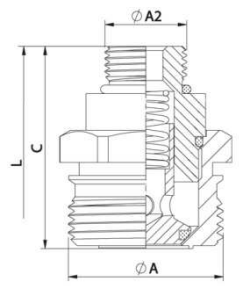

MALE

DN	ØA2	CH1	C	ØA	L	REF.	
13	3/4 "-16UNF M Without 37º cone	36	47	M36x2	*	122.11113HFA	250Bar

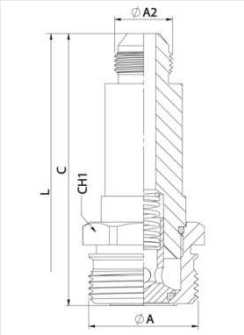

MALE

DN	ØA2	CH1	C	ØA	L	REF.	
13	3/4 "-16UNF M Prolonged	36	89,50	M36x2	*	122.11113GFA	250Bar

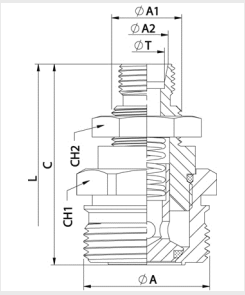

MALE

DN	ØA1	ØA2	ØT	CH1	CH2	C	ØA	L	REF.	
13	M16x1,5	M20x1,5	10L	36	27	53,50	M36x2	*	122.11113JDA	250Bar

• The nut is included in the Bulkhead version

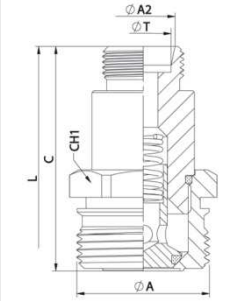

MALE

DN	ØA2	ØT	CH1	C	ØA	L	REF.	
13	M22x1,5 Prolonged	10L	36	61	M36x2	*	122.11113JGA	250Bar

• The nut is included in the Bulkhead version

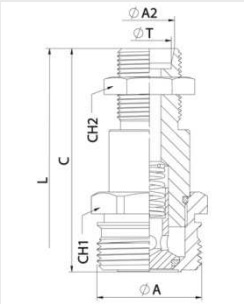

MALE

DN	ØA2	ØT	CH1	CH2	C	ØA	L	REF.	
13	M16x1,5 Prolonged Bulkhead	10L	36	27	77	M36x2	*	122.11113LGA	250Bar

• The nut is included in the Bulkhead version

122 SERIES AGR CAPS

AGR SERIES CAPS have been designed to protect FEMALE parts during disconnection.

MODEL STRUCTURE

For caps and parking parts

Example;

122.5433 AA

Series	Material	Part	Colour	Size	Standard
122.	**1** → Carbon ST **5** → Plastic	**4** → Cap **5** → Parking	**0** →Plain Metal **1** →Red **2** →Blue **3** →Yellow **4** →Green **5** →Black **6** →White	DN **3** → ½" | 13	AA

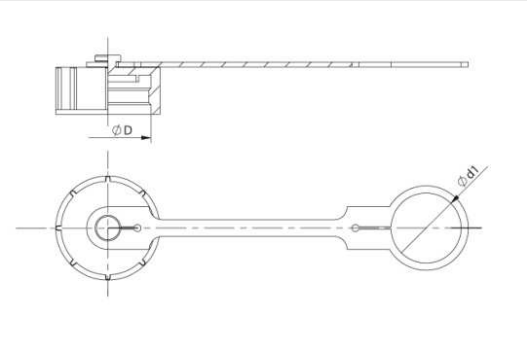

DN	REF.	ØD	ØD1
13	122.5433AA	M36x2	30

Standard in yellow

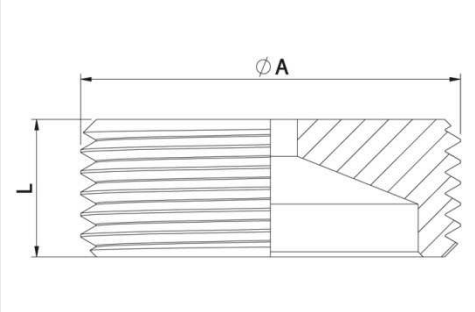

DN	REF.	L	ØA
13	122.5533AA	17	29,80

123 SERIES AGR+ISO-A

Designed to connect hydraulic systems of tractor and trailer

• Materials

Carbon Steel EN -10277-3
Seals: *NBR, Viton or EPDM*
Balls: *AISI 1010/1015*
Springs: *Carbon Steel DIN 17233/84(B)*

• Working temperature (Seals)

	NBR	Viton	EPDM
	+100ºC	+200ºC	+150ºC
	-30ºC	-10ºC	-40ºC

• Applications: Designed for Oil hydraulic. Applications according to European Directive 97.23.EC

• Sectors: Agricultural

• Equivalence

GROMELLE K-8000

MODEL STRUCTURE

Example;

123.11113 C

Series	Material	Part	Closing	O-Ring	Size	Thread
123.	**1** → Carbon ST	**1** → Male **2** → Female	**1** → Poppet V.	**1** → NBR **2** → Viton **3** → EPDM	**3** → ½" (DN 13)	C short L large

123 SERIES
AGR+ISO-A

SPECIAL OPTIONS:

Male with plastic cap 122.5433AC included, add 010 at the end of base code. (Min. quantity: 250 units)

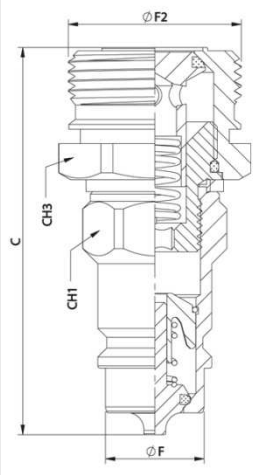

MALE

DN	CH1	CH3	ØF	ØF2	C	REF.	
13	27	36	20,56	36	76	123.11113C	250Bar

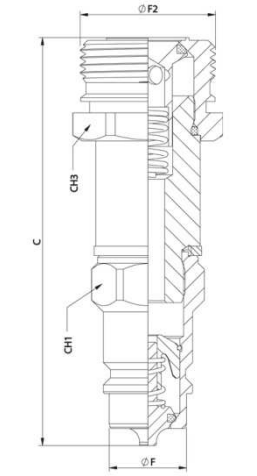

MALE

DN	CH1	CH3	ØF	ØF2	C	REF.	
13	27	36	20,56	36	104	123.11113L	250Bar

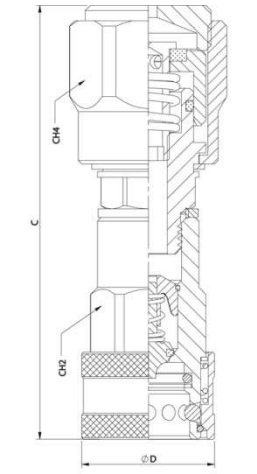

FEMALE

DN	CH2	CH4	C	ØD	REF.	
13	30	41	124,3	38	123.12113C	250Bar

125 SERIES
TFH

Poppet valve or CURP closing system.
BSPT, NPTF, DIN 2353, DIN 3852, SAE/ORB and other threads upon request
AISI 316 available only by minimum quantitites

• Materials

Carbon Steel EN -10277-3 / AISI 316L / Brass
Seals: *NBR, Viton or EPDM*
Back-up-ring: *PTFE*
Balls: *AISI 1010/1015*
Springs: *Carbon Steel DIN 17233/84(B)*

• Working temperature (Seals)

	NBR	Viton	EPDM
	+100ºC	+200ºC	+150ºC
	-30ºC	-10ºC	-40ºC

• Applications: Designed for Oil hydraulic Applications according to European Directive 97.23.EC

• Sectors: Industrial

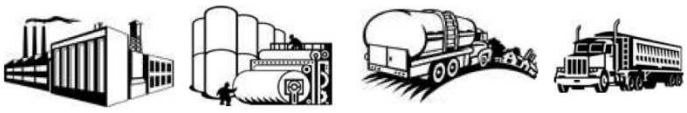

• Equivalence

RECTUS TEMA T - Series
CEJN Series 525

MODEL STRUCTURE

Example;

125.42315 AF

Series	Material	Part	Closing	O-Ring	Size	Thread
125.	**1** → Carbon ST **2** → AISI 316 **4** → Brass	**1** → Male **2** → Female	**0** → Without **1** → Poppet V. **3** → CURP *	**0** → Without **1** → NBR **2** → Viton **3** → EPDM		2 letters as per Table of Threads

	DN
1 → ¼"	06
2 → ⅜"	10
3 → ½"	13
4 → ¾"	20
5 → 1"	25
7 → 1 ¼"	40

* CURP = Connection Under Residual Pressure
CURP closing system not available in DN06 models.

125 SERIES
TFH

Carbon Steel

1/4" DN06 (CURP not available)

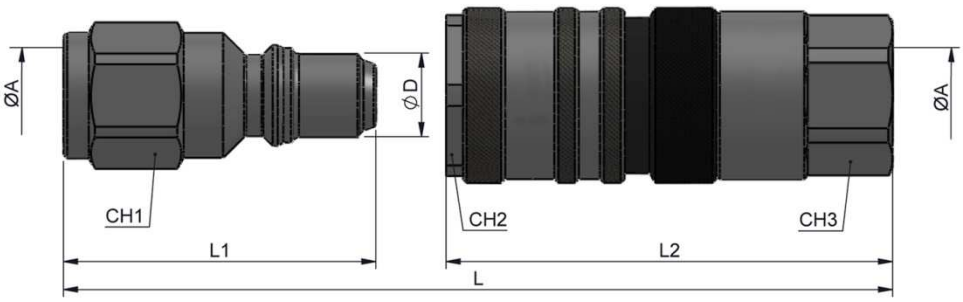

STANDARD *MALE* MODELS							
DN	ØA	REF.		CH1	ØD	L1	L
06	¼" BSP	125.11111AB	450Bar	19	11,9	45	81

STANDARD *FEMALE* MODELS							
DN	ØA	REF.		CH2	CH3	L2	L
06	¼" BSP	125.12111AB	450Bar	22	21	64	81

3/8" DN10

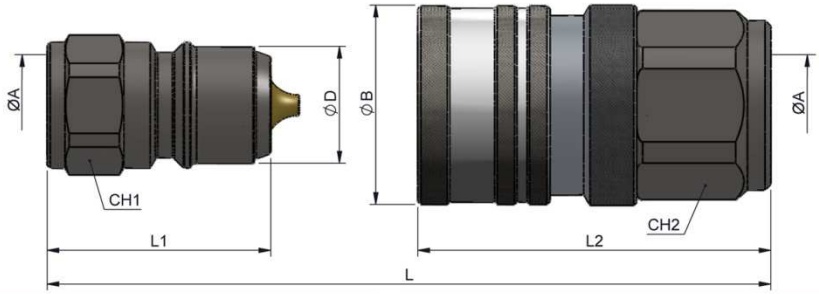

STANDARD *MALE* MODELS							
DN	ØA	REF.		CH1	ØD	L1	L
10	⅜" BSP	125.11112AC	350Bar	22	19,85	38	74

STANDARD *FEMALE* MODELS							
DN	ØA	REF.		CH2	ØB	L2	L
10	⅜" BSP	125.12112AC	350Bar	30	34	60	74

1/2" DN13

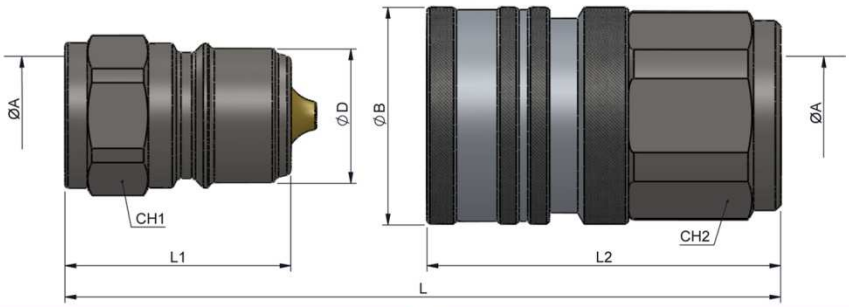

STANDARD *MALE* MODELS							
DN	ØA	REF.		CH1	ØD	L1	L
13	½" BSP	125.11113AD	300Bar	27	24,7	41,5	82

STANDARD *FEMALE* MODELS							
DN	ØA	REF.		CH2	ØB	L2	L
13	½" BSP	125.12113AD	300Bar	36	40	65	82

125 SERIES
TFH

Carbon Steel

3/4" DN20

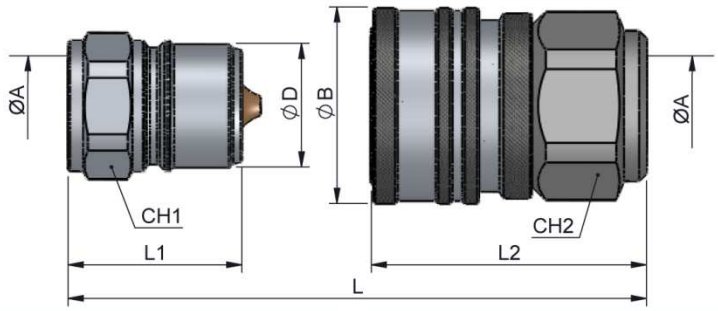

STANDARD *MALE* MODELS							
DN	ØA	REF.		CH1	ØD	L1	L
20	¾" BSP	125.11114AE	280Bar	36	32,7	46	91

STANDARD *FEMALE* MODELS							
DN	ØA	REF.		CH2	ØB	L2	L
20	¾" BSP	125.12114AE	280Bar	46	52	72	91

1" DN25

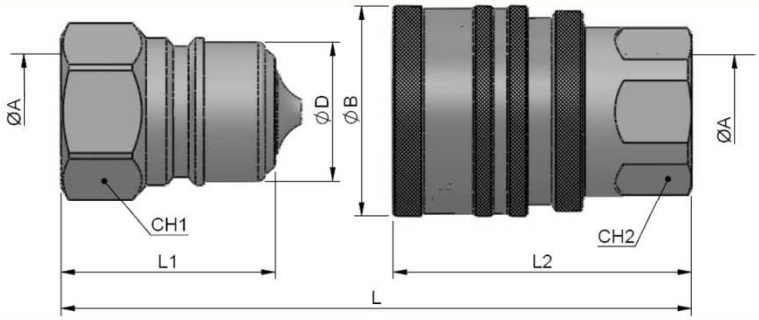

STANDARD *MALE* MODELS							
DN	ØA	REF.		CH1	ØD	L1	L
25	1" BSP	125.11115AF	250Bar	46	40,8	63	115,4

STANDARD *FEMALE* MODELS							
DN	ØA	REF.		CH2	ØB	L2	L
25	1" BSP	125.12115AF	250Bar	46	62	88	115,4

1 1/2" DN40

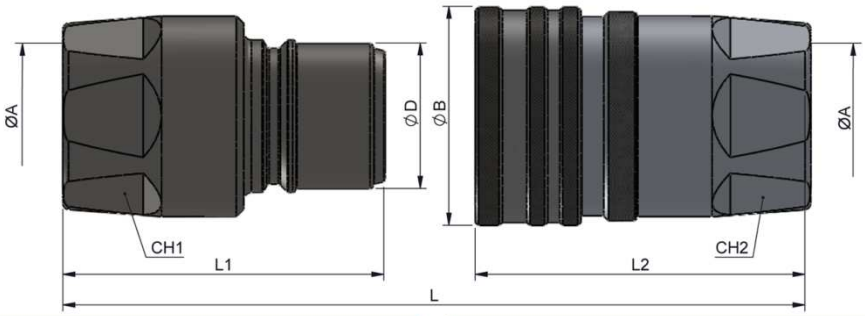

STANDARD *MALE* MODELS							
DN	ØA	REF.		CH1	ØD	L1	L
40	1½" BSP	125.11117AH	200Bar	60	48,5	107	173

STANDARD *FEMALE* MODELS							
DN	ØA	REF.		CH2	ØB	L2	L
40	1½" BSP	125.12117AH	200Bar	60	73	112	173

125 SERIES
TFH

PLUGS
& CAPS

TFH SERIES PLUGS / CAPS have been designed to protect FEMALE (coupler) and MALE (nipple) parts while they are disconnected.

Example;

125.5372 AA

Series	Material	Part	Colour	Size	Type
125.	**5** → Plastic	**3** → Plug **4** → Cap	**7** → Grey		AA

	DN
1 → ¼"	06
2 → ⅜"	10
3 → ½"	13
4 → ¾"	20
5 → 1"	25

Plug for Female Part

REF.	DN	Colour
125.5371AA	06	Grey
125.5372AA	10	Grey
125.5373AA	13	Grey
125.5374AA	20	Grey
125.53755AA	25	Grey

Cap for Male Part

REF.	DN	Colour
125.5471AA	06	Grey
125.5472AA	10	Grey
125.5473AA	13	Grey
125.5474AA	20	Grey
125.5475AA	25	Grey

125 SERIES
TFH

GRAPHICS

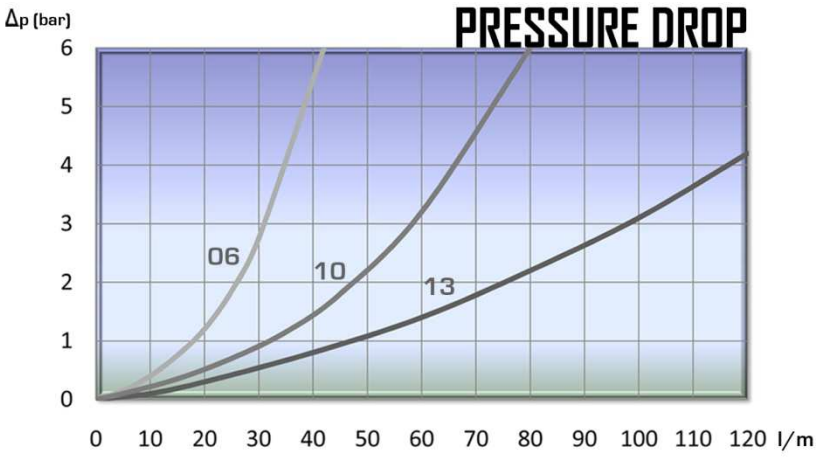

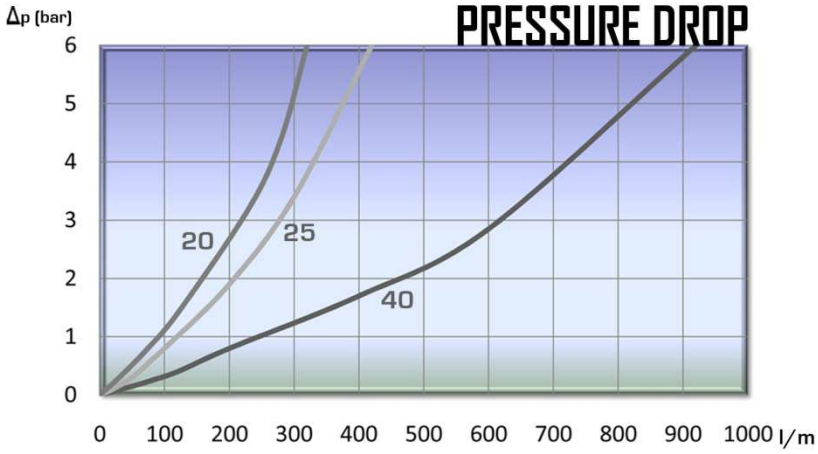

TECHNICAL DATA

DN	Min Burst Pressure (bar)			Max. Working Pressure *
	Male	Female	Coupled	
06	1650	1700	1800	450 bar
10	1320	1400	1400	350 bar
13	1100	1200	1200	300 bar
20	1050	1100	1120	280 bar
25	980	1050	1000	250 bar
40	750	780	800	200 bar

* Safety factor 1:4

125 SERIES
TFH

COSMOS FLOW

DN06

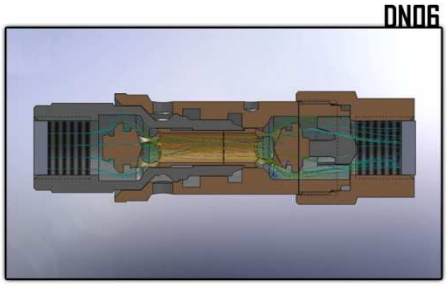

DN10

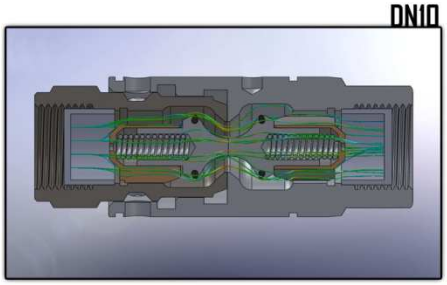

DN13

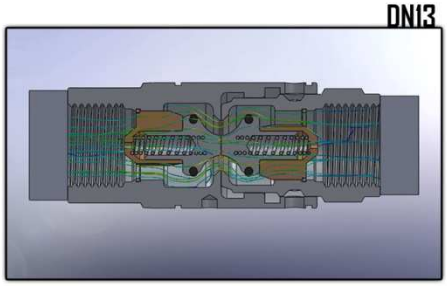

DN25

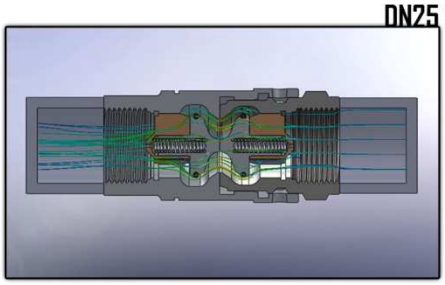

DN20

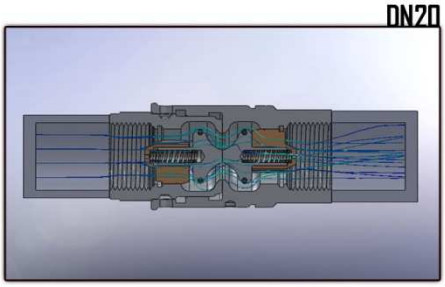

DN40

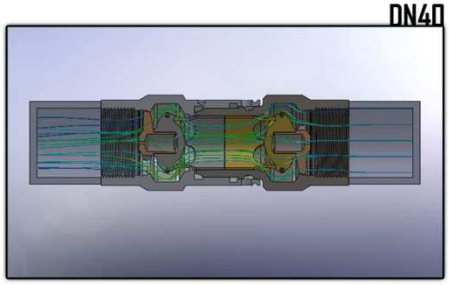

CURP CLOSING SYSTEM

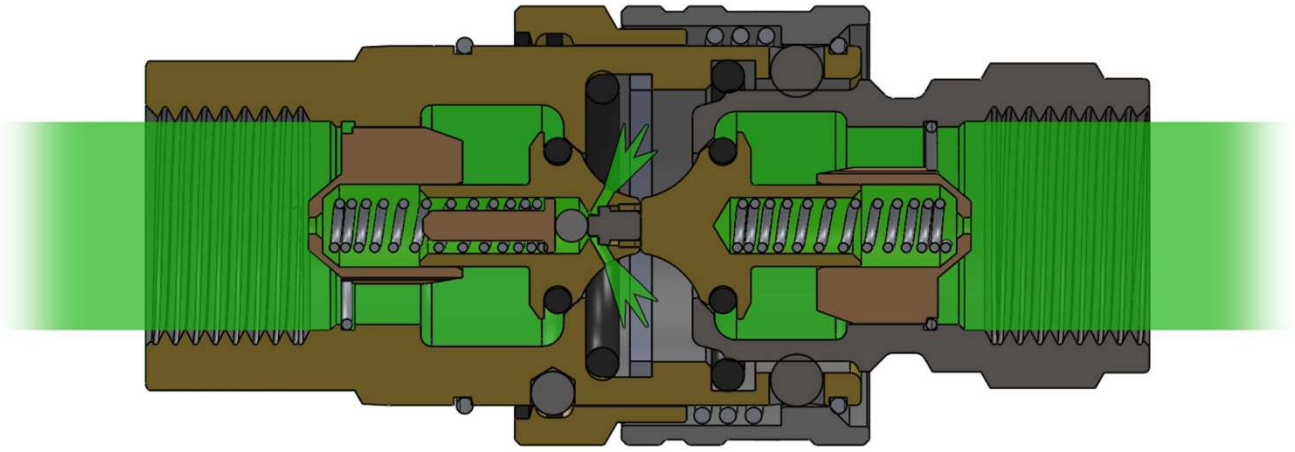

This system allows an easy connection under residual pressure.

126 SERIES
TPL

Big flow and reduced drop pressure.
Available only without valve, free flow

• Materials

Carbon Steel *EN -10277-3, AISI316, Brass DIN-EN 12164*
Seals: *Viton*
Balls: *As version*
Springs: *As version*

• Working temperature (Seals)

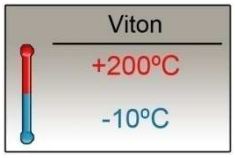

• Applications:

Designed for Oil and Hot Water. Applications according to European Directive 97.23.EC

• Sectors:

High pressure cleaning systems

• Equivalence

⅜" TEMA 3800
KEW

MODEL STRUCTURE

Example;

126.12022 AC

Series	Material	Part	Closing	O-Ring	Size	Thread
126.	**1** → Carbon ST **2** → AISI 316 **3** → AISI 303 **4** → Brass **8** → Carbon ST Ni. **9** → Brass Ni.	**1** → Male **2** → Female	**0** → Without	**0** → Without **1** → NBR **2** → Viton	**2** → ⅜" (DN 10)	2 letters as per Table of Threads

126 SERIES
TPL

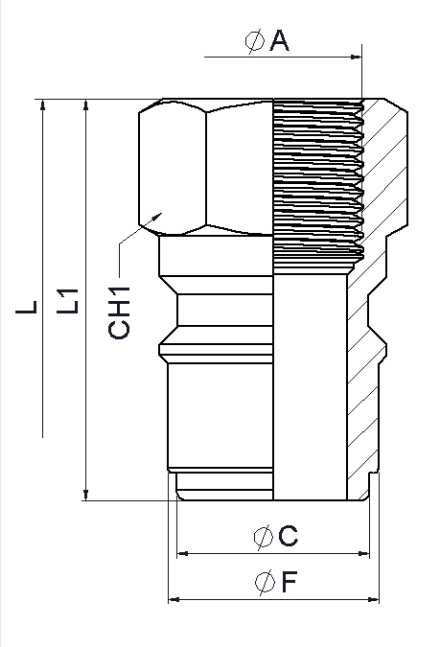

MALE

DN	CH1	L1	ØF	ØC	L	MATERIAL	REF.	ØA	
12	22	38	19,90	18,25	58	White zinc plated steel	126.11002AC	⅜" BSP	600 Bar
							126.11002BC	⅜" NPTF	
						Nickel plated steel	126.81002AC	⅜" BSP	600 Bar
							126.81002BC	⅜" NPTF	
						AISI 316	126.21002AC	⅜" BSP	350 Bar
							126.21002BC	⅜" NPTF	
14	27	48	19,90	18,25	68	White zinc plated steel	126.11002AD	½"BSP	600 Bar
							126.11002BD	½"NPTF	
						Nickel plated steel	126.81002AD	½"BSP	600 Bar
							126.81002BD	½"NPTF	
						AISI 316	126.21002AD	½"BSP	350 Bar
							126.21002BD	½"NPTF	

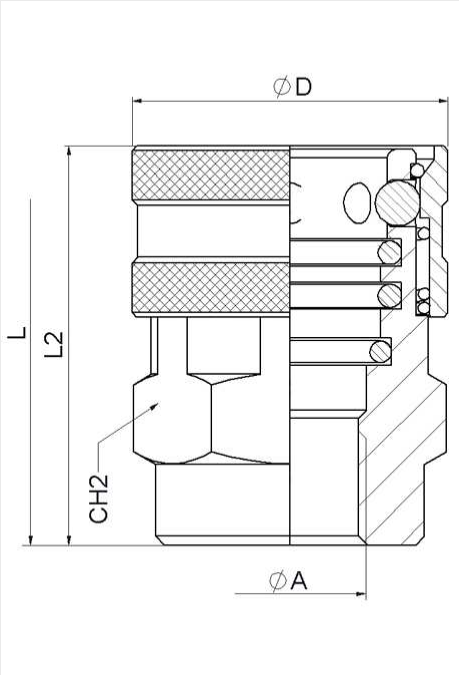

FEMALE

DN	CH2	L2	ØD	L	MATERIAL	REF.	ØA	
12	30	44	35	58	White zinc plated steel	126.12012AC	⅜" BSP	600 Bar
						126.12012BC	⅜" NPTF	
					Nickel plated steel	126.82012AC	⅜" BSP	600 Bar
						126.82012BC	⅜" NPTF	
					Brass - Viton	126.42022AC	⅜" BSP	350 Bar
						126.42022BC	⅜" NPTF	
					Nickel plated brass	126.92022AC	⅜" BSP	350 Bar
						126.92022BC	⅜" NPTF	
					AISI316	126.22022AC	⅜" BSP	500 Bar
						126.22022BC	⅜" NPTF	
14	30	44	35	68	White zinc plated steel	126.12012AD	½"BSP	600 Bar
						126.12012BD	½"NPTF	
					Nickel plated steel	126.82012AD	½"BSP	600 Bar
						126.82012BD	½"NPTF	
					Brass – Viton	126.42022AD	½"BSP	350 Bar
						126.42022BD	½"NPTF	
					Nickel plated brass	126.92022AD	½"BSP	350 Bar
						126.92022BD	½"NPTF	
					AISI316	126.22022AD	½"BSP	500 Bar
						126.22022BD	½"NPTF	

126 SERIES

TPL

PLUGS
& CAPS

TPL SERIES PLUGS/ CAPS have been desiogned to protect FEMALE (coupler) or MALE (nipple) parts while they are disconnected.

Example;

125.5372 AA

Series	Material	Part	Colour	Size	Type
125.	**5** → Plastic	**3** → Plug **4** → Cap	**7** → Grey	DN **2** → ⅜" | 10	AA

Plug for Female Part

REF.		DN	Colour
125.5372AA	Plug	10	Grey

Cap for Male Part

REF.		DN	Colour
125.5472AA	Cap	10	Grey

127 SERIES JAP

Specially designed for the Japanese market
Poppet Valve closing system

• Materials

Carbon Steel *EN-10277-3,*

Seals: NBR, Viton or EPDM

Back-up-ring: PTFE

Balls: *AISI 1010/1015*
Springs: *Carbon Steel DIN 17233/84(B)*

• Applications: Designed for Oil hydraulic Applications according to European Directive 97.23.EC

• Equivalence

FASTER HNVY

• Working temperature (Seals)

	NBR	Viton	EPDM
	+100ºC	+200ºC	+150ºC
	-30ºC	-10ºC	-40ºC

• Sectors: Agricultural, Industrial

MODEL STRUCTURE

Example;

127.11115 AF

Series	Material	Part	Closing	O-Ring	Size	Thread
127.	**1** → Carbon ST	**1**→ Male **2** → Female	**1** → Poppet V.	**0** → Without **1** → NBR **2** → Viton **3** → EPDM	**5** → 1” DN 25	2 letters as per Table of Threads

127 SERIES
JAP

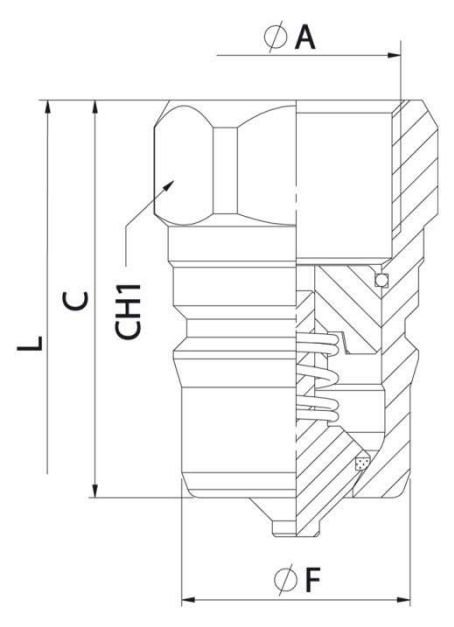

MALE

DN	ØA	CH1	C	ØF	L	REF.	
25	1” BSP	41	63	36,20	126	127.11115AF	250Bar

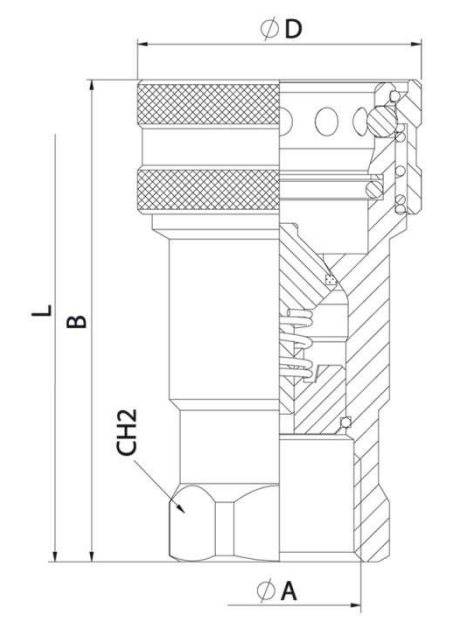

FEMALE

DN	ØA	CH2	B	ØD	L	REF.	
25	1” BSP	41	98	58	126	127.12115AF	250 Bar

128 SERIES
TVZ

Manufactured according to the requirements of the most important truck manufacurer.

• Materials

Carbon Steel *EN-10277-3,*

Seals: NBR, Viton or EPDM

Back-up-ring: PTFE

Balls: *AISI 1010/1015*
Springs: *Carbon Steel DIN 17233/84(B)*

• Applications: Designed for Oil hydraulic Applications according to European Directive 97.23.EC

• Equivalence

TALLERES ARIZA

• Working temperature (Seals)

	NBR	Viton	EPDM
	+100ºC	+200ºC	+150ºC
	-30ºC	-10ºC	-40ºC

• Sectors: Agricultural, Industrial

MODEL STRUCTURE

Example;

128.11215 AF

Series	Material	Part	Closing	O-Ring	Size	Thread
128.	**1** → Carbon ST	**1** → Male **2** → Female	**2** → Ball	**0** → Without **1** → NBR **2** → Viton **3** → EPDM	**4** → ¾" DN 20 **5** → 1" DN 25	2 letters as per Table of Threads

128 SERIES
TVZ

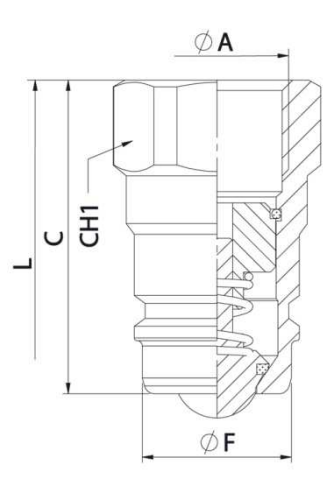

MALE

DN	ØA	CH1	C	ØF	L	REF.	
20	¾" BSP	36	59	28	117,50	128.11214AE	250Bar
25	1" BSP	41	72	36,50	138	128.11215AF	230Bar

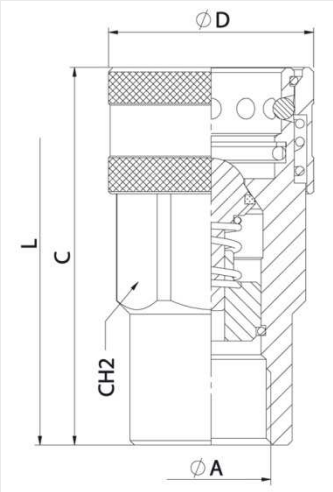

FEMALE

DN	ØA	CH2	C	ØD	L	REF.	
20	¾" BSP	38	83,50	45,50	117,50	128.12214AE	250Bar

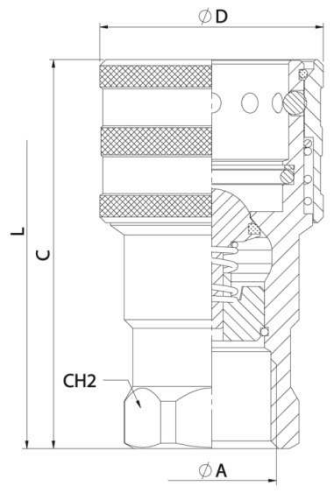

FEMALE

DN	ØA	CH2	C	ØD	L	REF.	
25	1" BSP	41	105	57,50	138	128.12215AF	230Bar

129 SERIES
ISO-A SAFETY SLEEVE

Manufacured according to ISO 7241-A norm, DN13 size meets also ISO 5675 requirements. Poppet Valve or Ball closing system.
BSP, NPTF, SAE / ORB threads. Other threads available upon request.

• Materials

Body: *Carbon Steel EN -10277-3, AISI 316, AISI 303, Brass*
Seals: *NBR , Viton or EPDM*
Back-Up-Ring: *PTFE*
Balls: *AISI 1010/1015*
Springs: *Carbon Steel*
DIN 17233/84(B)

• Applications: Designed for Oil hydraulic Applications according to European Directive 97.23.EC

• Equivalence

FASTER ANV
AEROQUIP FD56
PARKER 6600
SNAP-TITE 61

• Working temperature (Seals)

	NBR	Viton	EPDM
	+100ºC	+200ºC	+150ºC
	-30ºC	-10ºC	-40ºC

• Sectors: Industrial, Agricultural

MODEL STRUCTURE

Example;

129.11112 BC

Series	Material	Part	Closing	O-Ring	Size	Thread
129	**1** → Carbon ST **2** → AISI 316 **3** → AISI 303 **4** → Brass	**1** → Male **2** → Female	**0** → Without **1** → Poppet V. **2** → Ball	**0** → Without **1** → NBR **2** → Viton **3** → EPDM		2 letters (see Table of Threads page 999-1)

	DN
1 → ¼"	06
2 → ⅜"	10
3 → ½"	13
4 → ¾"	20
5 → 1"	25
6 → 1 ¼"	32
7 → 1 ½"	40
8 → 2"	50

129 SERIES
ISO-A

SAFETY
SLEEVE

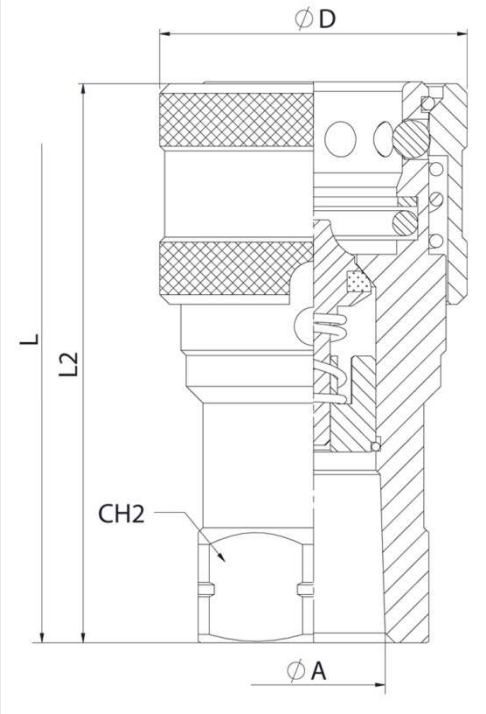

STANDARD MODEL

DN	ØA	REF.		CH2	L2	ØD	L
06	¼" BSP	129.12111AB	350Bar	19	51	26	72
	¼" NPTF	129.12111BB					
10	⅜" BSP	129.12112AC	300Bar	24	58,50	32	81
	⅜" NPTF	129.12112BC					
	⅜" BSPT	129.12112DC					
13	½" BSP	129.12113AD	300Bar	30	63,50	38	87,50
	½" NPTF	129.12113BD					
	½" BSPT	129.12113DD					
20	¾" BSP	129.12114AE	250Bar	38	83,50	46	112
	¾" NPTF	129.12114BE					
25	1" BSP	129.12115AF	230Bar	46	97	55	126
	1" NPTF	129.12115BF					
32	1" ¼ BSP	129.12116AG	230Bar	50	117	70	150
	1" ¼ NPTF	129.12116BG					
40	1" ½" BSP	129.12117AH	200Bar	60	133	84,50	167
	1" ½" NPTF	129.12117BH					
50	2" BSP	129.12118AI	130Bar	75	165	100	210
	2" NPTF	129.12118BI					

Manufactured according to ISO 7241-A norm, DN13 size meets as well ISO 5675 requirements

131 SERIES CPR

Manufactured according ISO 16028 norm.
Flat Poppet Valve which avoids fluid leakeages during the connection and disconnection.

• Materials

Carbon Steel *EN-10277-3 / AISI 316L*

Seals: NBR. Viton or EPDM

Back-up-ring: PTFE

Balls: *AISI 1010/1015*
Springs: *Carbon Steel DIN 17233/84(B)*

• Applications: Designed for Oil hydraulic Applications according to European Directive 97.23.EC

• Equivalence

FASTER 2FFI
PARKER FEM
AEROQUIP FD89
SNAP-TITE 74

• Working temperature (Seals)

	NBR	Viton	EPDM
	+100ºC	+200ºC	+150ºC
	-30ºC	-10ºC	-40ºC

• Sectors: Industrial, Building Machinery

MODEL STRUCTURE

Example;

131.11113 AD

Series	Material	Part	Closing	O-Ring	Size	Thread
131.	**1** → Carbon ST **2** → AISI316 **8** → Carbon ST NQ	**1** → Male **2** → Female	**1** → Poppet V. **3** → C.U.R.P.*	**1** → NBR **2** → Viton **3** → EPDM		2 letters as per Table of Threads

	DN
0 → ⅛"	04
1 → ¼"	07
2 → ⅜"	09
3 → ½"	13
4 → ¾"	15
5 → 1"	17
6 → 1 ¼"	21
7 → 1 ½"	30
8 2"	45

*** C.U.R.P. IS AVAILABLE IN MALE PART ONLY**

131 SERIES
CPR

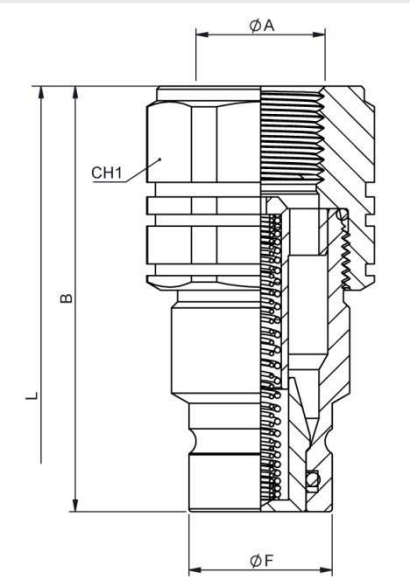

MALE

DN	CH1	B	ØF	L
04	17	36,35	11,65	68,25
07	22	48	16,20	85,50
09	30	62,50	19,80	116,50
13	36	62,50	24,50	134,50
15	36	70,50	27	132
17	41	82,50	30	154
21	55	90	36	173
30	65	111	57	215
45	75	125	73	

STANDARD MODELS

DN	ØA	MALE	FEMALE	
04	⅛" BSP	131.11110AA	131.12110AA	500Bar
	⅛" NPTF	131.11110BA	131.12110BA	
07	¼" BSP	131.11111AB	131.12111AB	500Bar
	¼" NPTF	131.11111BB	131.12111BB	
	9/16"-18 UNF	131.11111GC	131.12111GC	
09	⅜" BSP	131.11112AC	131.12112AC	350Bar
	⅜" NPTF	131.11112BC	131.12112BC	
	½ " BSP	131.11112AD	131.12112AD	
	½ " NPTF	131.11112BD	131.12112BD	
	¾ "-16ORB	131.11112GF	131.12112GF	
	⅞ "-14ORB	131.11112GH	131.12112GH	
13	½" BSP	131.11113AD	131.12113AD	330Bar
	½" NPTF	131.11113BD	131.12113BD	
	¾" BSP	131.11113AE	131.12113AE	
	¾" NPTF	131.11113BE	131.12113BE	
	⅞" - 14ORB	131.11113GH	131.12113GH	
	1 1/16" 12ORB	131.11113GK	131.12113GK	
15	¾" BSP	131.11114AE	131.12114AE	
	¾" NPTF	131.11114BE	131.12114BE	
	1 1/16"-12ORB	131.11114GK	131.12114GK	
17	1" BSP	131.11115AF	131.12115AF	
	1" NPTF	131.11115BF	131.12115BF	
	1 5/16"-12ORB	131.11115GO	131.12115GO	
21	1 ¼" BSP	131.11116AG	131.12116AG	300Bar
	1 ¼" NPTF	131.11116BG	131.12116BG	
30	1 ½" BSP	131.11117AH	131.12117AH	280Bar
	1 ½" NPTF	131.11117BH	131.12117BH	
45	2" BSP	131.11118AI	131.12118AI	250Bar

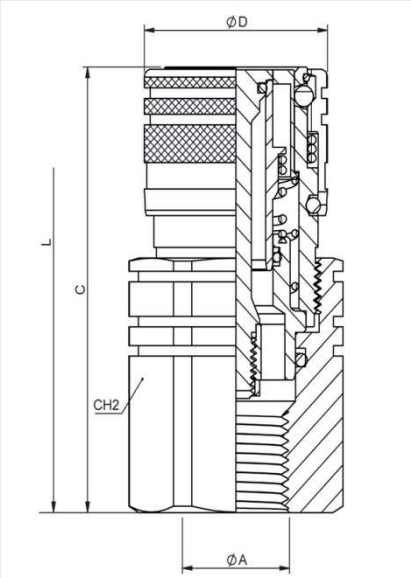

FEMALE

DN	CH2	C	ØD	L
04	19	39,85	20	68,25
07	27	48	28	85,50
09	30	64,50	32	116,50
13	41	80,50	38	134,50
15	41	78	42	132
17	46	92,50	48	154
21	55	105	55	173
30	65	132,50	80	215
45	80	165	100	

131 SERIES CPR

DIN2353

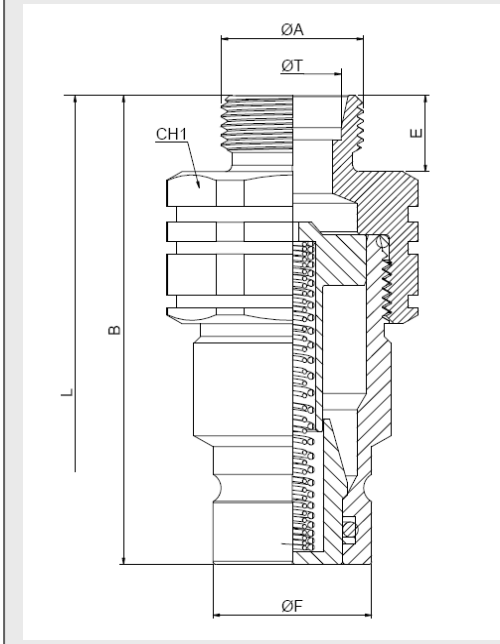

STANDARD MALE MODELS

DN	ØA	ØT	REF.		CH1	B	ØF	E	L
07	M12x1,5	6L	131.11111JB	500 Bar	22	55	16,2	12	106,2
	M14x1,5	8L	131.11111JC			54		11	104,2
09	⅜" BSP M.	*	131.11112AN	350 Bar	30	62,5	19.79	12	124,4
	M14x1,5	8L	131.11112JC			61,5		11	122,2
	M16x1,5	10L	131.11112JD			62,5		12	124,4
	M16x1,5	8S	131.11112KD						
	M18x1,5	10S	131.11112KE						
	M20x1,5	12S	131.11112KF						
13	M14x1,5	8L	131.11113JC	330 Bar	36	73	24,58	11	134,9
	M16x1,5	10L	131.11113JD			74		12	136,9
	M18x1,5	12L	131.11113JE						
	M22x1,5	15L	131.11113JG						
	M26x1,5	18L	131.11113JI						
	M18x1,5	10S	131.11113KE						
	M20x1,5	12S	131.11113KF						
	M22x1,5	14S	131.11113KG						
	M24x1,5	16S	131.11113KH						
15	M18x1,5	12l	131.11114JE	330 Bar	36	74	27,08	12	139,5
	M22x1,5	15L	131.11114JG						
	M26x1,5	18L	131.11114JI						
	M30x2	22L	131.11114JJ			80		18	151,5
	M22x1,5	14S	131.11114KG			74		12	139,5
	M24x1,5	16S	131.11114KH						
	M30x2	20S	131.11114KJ			80		18	151,5
17	M26x1,5	18L	131.11115JI	330 Bar	41	82	30	12	152,2
	M30x2	22L	131.11115JJ			88		18	164,2
	M36x2	28L	131.11115JK		46	81			157,2
	M45x2	35L	131.11115JM					16	151,2
	M30x2	20S	131.11115KJ		41	86		18	163,2
	M36x2	25S	131.11115KK						
	M42x2	30S	131.11115KL		46	81			155,2
	M52x2	38S	131.11115KN		55			20	153,2

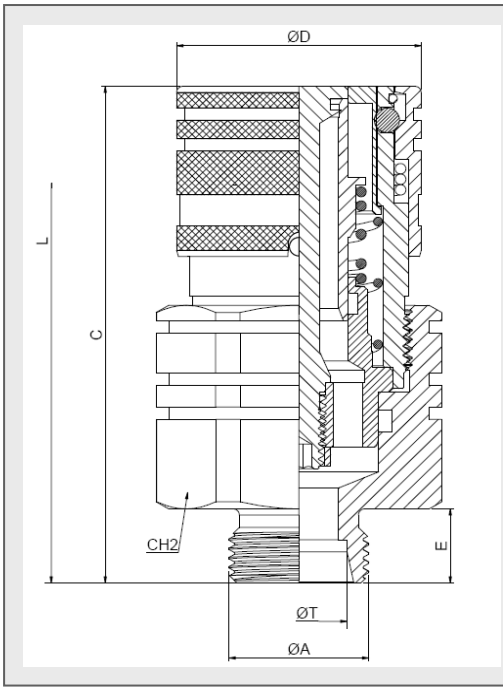

STANDARD FEMALE MODELS

DN	ØA	ØT	REF.		CH2	C	ØD	E	L
07	M12x1,5	6L	131.12111JB	500 Bar	27	62	27,5	12	106,2
	M14x1,5	8L	131.12111JC			63		11	104,2
09	⅜" BSP M.	*	131.12112AN	350 Bar	30	77,5	33	12	124,4
	M14x1,5	8L	131.12112JC			76,5		11	122,2
	M16x1,5	10L	131.12112JD			77,5		12	124,4
	M16x1,5	8S	131.12112KD						
	M18x1,5	10S	131.12112KE						
	M20x1,5	12S	131.12112KF						
13	M14x1,5	8L	131.12113JC	330 Bar	41	79,5	38,5	11	134,9
	M16x1,5	10L	131.12113JD			80,5		12	136,9
	M18x1,5	12L	131.12113JE						
	M22x1,5	15L	131.12113JG						
	M26x1,5	18L	131.12113JI						
	M18x1,5	10S	131.12113KE						
	M20x1,5	12S	131.12113KF						
	M22x1,5	14S	131.12113KG						
	M24x1,5	16S	131.12113KH						
15	M18x1,5	12l	131.12114JE	330 Bar	41	83,1	42	12	139,5
	M22x1,5	15L	131.12114JG						
	M26x1,5	18L	131.12114JI						
	M30x2	22L	131.12114JJ			89,1		18	151,5
	M22x1,5	14S	131.12114KG			83,1		12	139,5
	M24x1,5	16S	131.12114KH						
	M30x2	20S	131.12114KJ			89,1		18	151,5
17	M26x1,5	18L	131.12115JI	330 Bar	46	92	30	12	152,2
	M30x2	22L	131.12115JJ			98		18	164,2
	M36x2	28L	131.12115JK						157,2
	M45x2	35L	131.12115JM			92		16	151,2
	M30x2	20S	131.12115KJ			99		18	163,2
	M36x2	25S	131.12115KK						
	M42x2	30S	131.12115KL			96			155,2
	M52x2	38S	131.12115KN		55	94		20	153,2

131 SERIES CPR

DIN2353

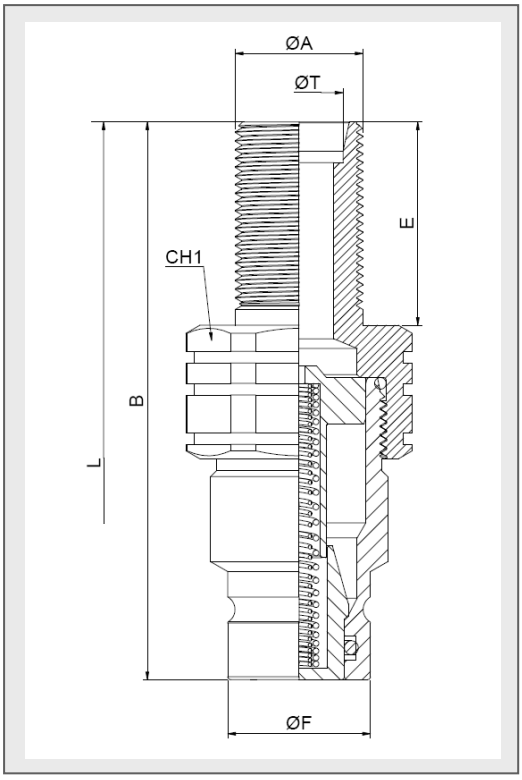

STANDARD MALE MODELS

DN	ØA	ØT	REF.		CH1	B	ØF	E	L
07	M12x1,5	6L	131.11111LB	500Bar	22	68	16,2	25	132,2
	M14x1,5	8L	131.11111LC			77		34	150,2
09	M14x1,5	8L	131.11112LC	350Bar	30	84,5	19,79	34	168,2
	M16x1,5	10L	131.11112LD			85,5		35	170,2
	M16x1,5	8S	131.11112MD			76,5		26	152,2
	M18x1,5	10S	131.11112ME			77,5		27	154,2
	M20x1,5	12S	131.11112MF			85,5		35	170,2
13	M14x1,5	8L	131.11113LC	330Bar	41	97	24,58	34	182
	M16x1,5	10L	131.11113LD					35	183
	M18x1,,5	12L	131.11113LE						
	M22x1,5	15L	131.11113LG			96			181
	M26x1,5	18L	131.11113LI						
	M18x1,5	10S	131.11113ME						183
	M20x1,5	12S	131.11113MF			97			182
	M22x1,5	14S	131.11113MG						
	M24x1,5	16S	131.11113MH						
15	M18x1,5	12l	131.11114LE	330Bar	41	97	27,08	35	185,5
	M22x1,5	15L	131.11114LG			96			183,5
	M26x1,5	18L	131.11114LI						
	M30x2	22L	131.11114LJ						
	M24x1,5	16S	131.11114MH			97			184,5
	M30x2	20S	131.11114MJ						
17	M26x1,5	18L	131.11115LI	330Bar	46	106	30	35	199,2
	M30x2	22L	131.11115LJ						
	M36x2	28L	131.11115LK			98		34	190,2
	M45x2	35L	131.11115LM		46	100		36	186,2
	M30x2	20S	131.11115MJ		46	106		34	198,2
	M36x2	25S	131.11115MK			109		38	205,2
	M42x2	30S	131.11115ML		46	104		40	199.2
	M52x2	38S	131.11115MN		55				196.2

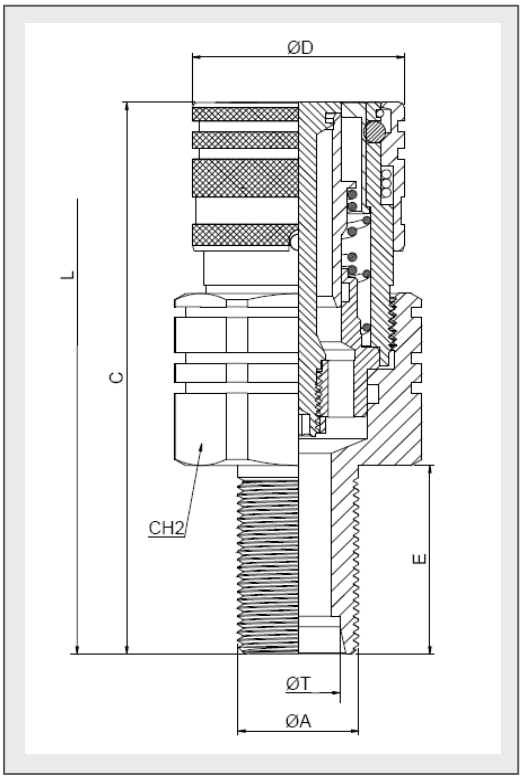

STANDARD FEMALE MODELS

DN	ØA	ØT	REF.		CH2	C	ØD	E	L
07	M12x1,5	6L	131.12111LB	500Bar	27	75	27,5	25	132,2
	M14x1,5	8L	131.12111LC			84		34	150,2
09	M14x1,5	8L	131.12112LC	350Bar	30	99,5	33	34	168,2
	M16x1,5	10L	131.12112LD			100,5		35	170,2
	M16x1,5	8S	131.12112MD			91,5		26	152,2
	M18x1,5	10S	131.12112ME			92,5		27	154,2
	M20x1,5	12S	131.12112MF			100,5		35	170,2
13	M14x1,5	8L	131.12113LC	330Bar	41	102,5	38,5	34	182
	M16x1,5	10L	131.12113LD			103,5		35	183
	M18x1,,5	12L	131.12113LE						
	M22x1,5	15L	131.12113LG			102,5			181
	M26x1,5	18L	131.12113LI						
	M18x1,5	10S	131.12113ME						183
	M20x1,5	12S	131.12113MF			103,5			182
	M22x1,5	14S	131.12113MG						
	M24x1,5	16S	131.12113MH						
15	M18x1,5	12l	131.12114LE	330Bar	41	106,1	42	35	185,5
	M22x1,5	15L	131.12114LG			105,1			183,5
	M26x1,5	18L	131.12114LI						
	M30x2	22L	131.12114LJ						
	M24x1,5	16S	131.12114MH						184,5
	M30x2	20S	131.12114MJ						
17	M26x1,5	18L	131.12115LI	330Bar	46	115	48,5	35	199,2
	M30x2	22L	131.12115LJ						
	M36x2	28L	131.12115LK			114		34	190,2
	M45x2	35L	131.12115LM			108		36	186,2
	M30x2	20S	131.12115MJ			114		34	198,2
	M36x2	25S	131.12115MK			118		38	205,2
	M42x2	30S	131.12115ML			117		40	199.2
	M52x2	38S	131.12115MN		55	114			196.2

131 SERIES
CPR
C.U.R.P.

Manufactured according ISO 16028 norm.
Flat Poppet Valve which avoids fluid leakages during the connection and disconnection.

	NBR	Viton	EPDM
	+100ºC	+200ºC	+150ºC
	-30ºC	-10ºC	-40ºC

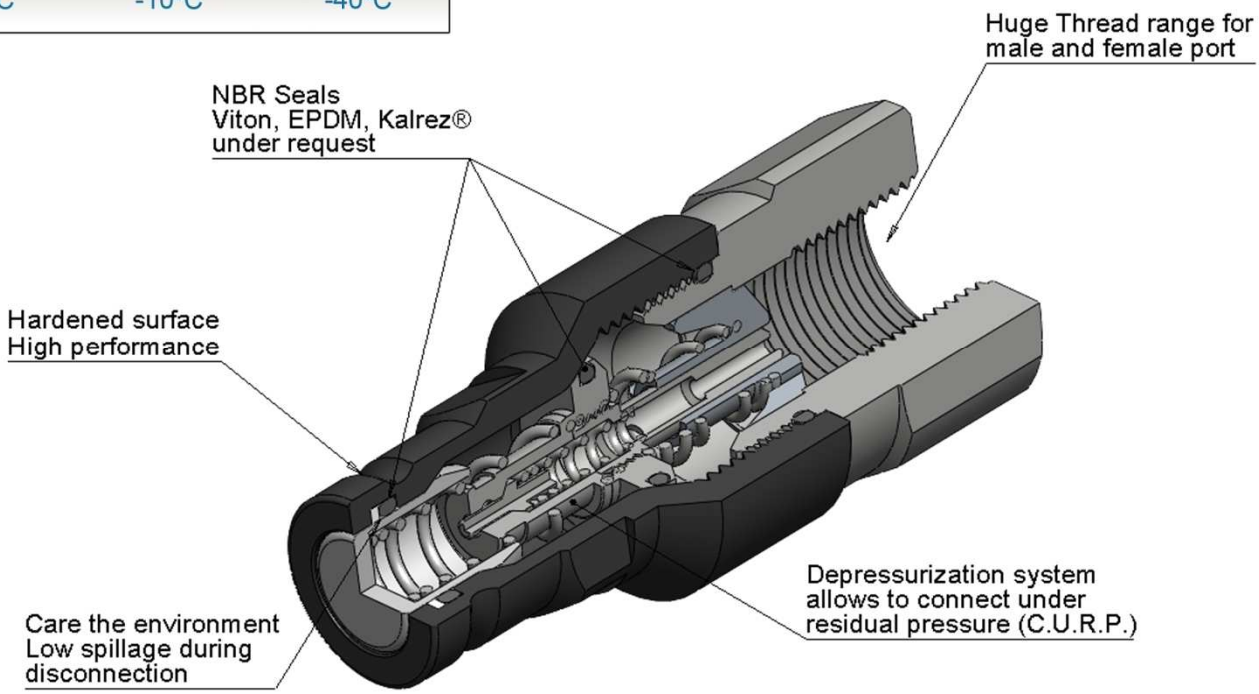

STANDARD MODEL CARBON STEEL

DN	Port	REF.	Working Pressure	Rated Flow	Max. Residual Pressure	Spillage
09	⅜"BSP	131.11312AC	350 Bar	45 l/min	300 Bar	0,010 ml
13	½" BSP	131.11313AD	330 Bar	90 l/min	300 Bar	0,010 ml
15	¾" BSP	131.11314AE	330 Bar	200 l/min	300 Bar	0,120 ml
17	1" BSP	131.11315AF	330 Bar	300 l/min	250 Bar	0,200 ml
21	1 ¼" BSP	131.11316AG	300 Bar	380 l/min	250 Bar	0,250 ml
30	1 ½" BSP	131.11317AH	280 Bar	750 l/min	200 Bar	0,300 ml

131 SERIES CPR

STAINLESS STEEL
AISI 316

Manufactured according ISO 16028 norm.
Flat Poppet Valve which avoids fluid leakages during the connection and disconnection.

• Materials

Stainless steel AISI 316

Seals: NBR, Viton or EPDM

Back-up-ring: PTFE

Balls: *AISI 1010/1015*
Springs: *AISI302 DIN17224*

• Applications:

Designed for Oil hydraulic Applications according to European Directive 97.23.EC
Special for American market

• Working temperature (Seals)

	NBR	Viton	EPDM
	+100ºC	+200ºC	+150ºC
	-30ºC	-10ºC	-40ºC

• Sectors: Industrial, Chemical

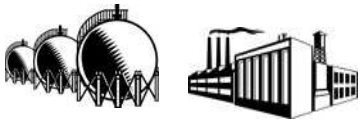

MODEL STRUCTURE

Example;

131.21123 AD

Series	Material	Part	Closing	O-Ring	Size	Thread
131.	**2** → AISI316	**1** → Male **2** → Female	**1** → Poppet V.	**1** → NBR **2** → Viton **3** → EPDM		2 letters as per Table of Threads

	DN
1 → ¼"	06
2 → ⅜"	10
3 → ½"	13
4 → ¾"	20
5 → 1"	25
6 → 1 ¼"	32
7 → 1 ½"	40
8 → 2"	50

131 SERIES
CPR

STAINLESS STEEL
AISI 316

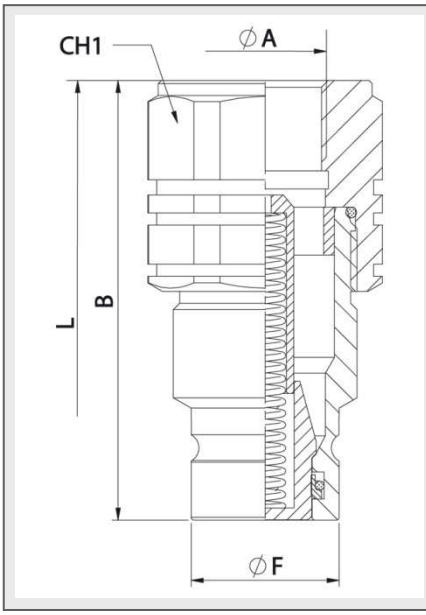

MALE

DN	CH1	B	ØF	L
04	17	36,35	11,65	68,25
07	22	48	16,20	85,50
09	30	62,50	19,80	116,50
13	36	62,50	24,50	134,50
15	36	70,50	27	132
17	41	82,50	30	154
21	55	90	36	173
30	65	111	57	215
45	75	125	73	

STANDARD MODELS

DN	ØA	MALE	FEMALE	
04	⅛" BSP	131.21110AA	131.22110AA	350Bar
	⅛" NPTF	131.21110BA	131.22110BA	
07	¼" BSP	131.21121AB	131.22121AB	350Bar
	¼" NPTF	131.21121BB	131.22121BB	
09	⅜" BSP	131.21122AC	131.22122AC	250Bar
	⅜" NPTF	131.21122BC	131.22122BC	
	½ " BSP	131.21122AD	131.22122AD	
	½ " NPTF	131.21122BD	131.22122BD	
	¾ "-16ORB	131.21122GF	131.22122GF	
	⅞ "-14ORB	131.21122GH	131.22122GH	
13	½" BSP	131.21123AD	131.22123AD	250Bar
	½" NPTF	131.21123BD	131.22123BD	
	¾" BSP	131.21123AE	131.22123AE	
	¾" NPTF	131.21123BE	131.22123BE	
	⅞" - 14ORB	131.21123GH	131.22123GH	
	1 1/16" 12ORB	131.21123GK	131.22123GK	
15	¾" BSP	131.21124AE	131.22124AE	250Bar
	¾" NPTF	131.21124BE	131.22124BE	
	1 1/16"-12ORB	131.21124GK	131.22124GK	
17	1" BSP	131.21125AF	131.22125AF	250Bar
	1" NPTF	131.21125BF	131.22125BF	
	1 5/16"-12ORB	131.21125GO	131.22125GO	
21	1 ¼" BSP	131.21126AG	131.22126AG	250Bar
	1 ¼" NPTF	131.21126BG	131.22126BG	
30	1 ½" BSP	131.21127AH	131.22127AH	250Bar
	1 ½" NPTF	131.21127BH	131.22127BH	
45	2" BSP	131.21128AI	131.22128AI	100Bar

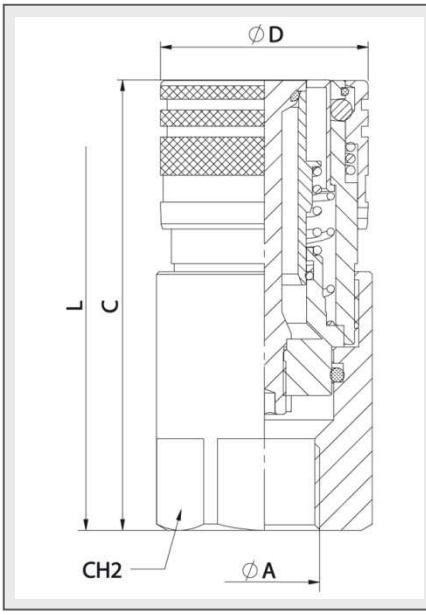

FEMALE

DN	CH2	C	ØD	L
04	19	39,85	20	68,25
07	27	48	28	85,50
09	30	64,50	32	116,50
13	41	80,50	38	134,50
15	41	78	42	132
17	46	92,50	48	154
21	55	105	55	173
30	65	132,50	80	215
45	80	165	100	

131 SERIES CPR

TECHNICAL DATA Carbon Steel

DN	Rated Flow	Min Burst Pressure (bar)			Max. Working Pressure
		Male	Female	Coupled	
04	5 l/m	1950	1850	2000	500 Bar
07	18 l/m	1950	1850	2000	500 Bar
09	45 l/m	1300	1200	1400	350 Bar
13	75 l/m	1300	1200	1400	330 Bar
15	150 l/m	1250	1180	1400	330 Bar
17	200 l/m	1200	1150	1400	330 Bar
21	220 l/m	1150	1150	1400	300 Bar
30	240 l/m	1080	1100	1400	280 Bar

TECHNICAL DATA Stainless Steel

DN	Rated Flow	Min Burst Pressure (bar)			Max. Working Pressure
		Male	Female	Coupled	
04	5 l/m	1450	1400	1400	350 Bar
07	18 l/m	1450	1400	1400	350 Bar
09	45 l/m	1020	1100	1000	250 Bar
13	75 l/m	1000	980	1000	250 Bar
15	150 l/m	950	970	1000	250 Bar
17	200 l/m	950	940	1000	250 Bar
21	220 l/m	930	900	1000	250 Bar
30	240 l/m	930	890	1000	250 Bar

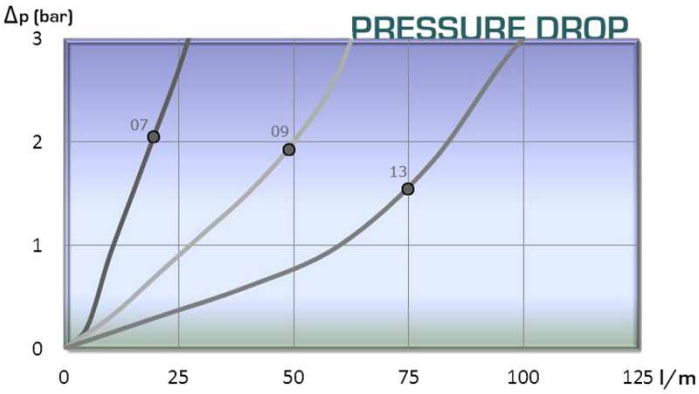

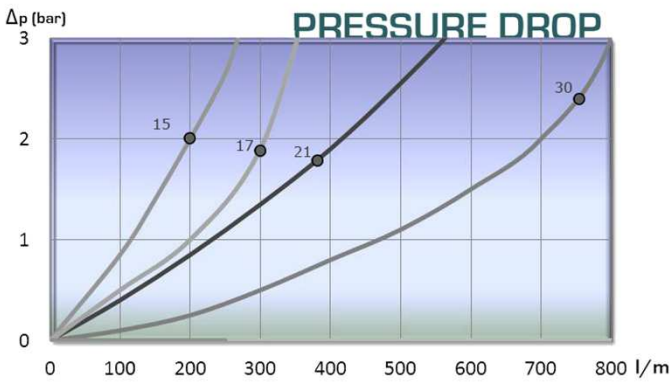

131 SERIES CPR

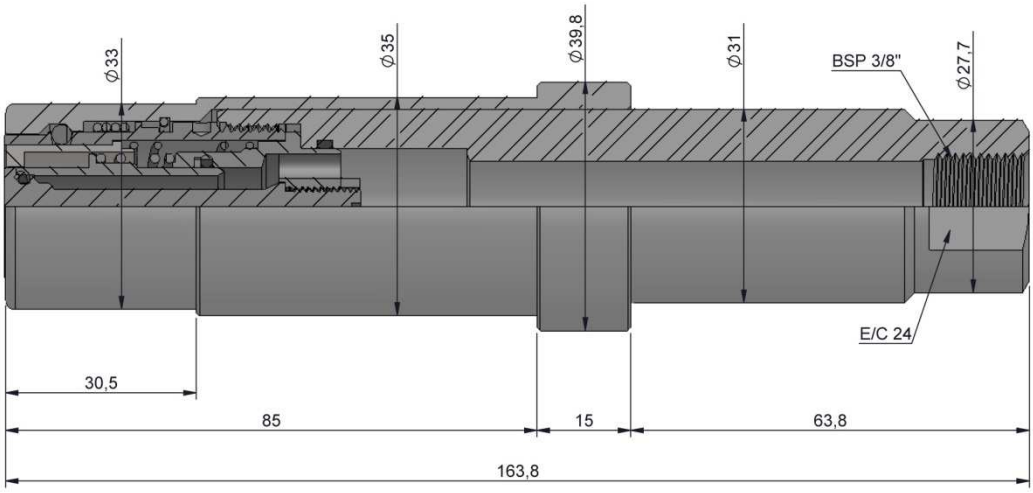

STANDARD MODEL CARBON STEEL						
DN	ØA	REF.		E/C	ØD	L
09	3/8"BSP	131SB.12112AC	350	24	33	164

TECHNICAL DATA					
DN	Nominal Flow	Min. Burst Pressure			Max. Working Pressure
		Male	Female	Coupled	
09	45 l/m	1300	1200	1400	350 bar

Designation

DN-09 FLAT FACE FEMALE 3/8" high pressure to lift trash containers

Features:

✓*Developed for use in working with high frequency pulsating pressure and water hammer.*
✓*Pressure: 350 bar.*
✓*Connectable with a residual mean pressure.*
✓Nickel plated outer body chemical, very corrosion resistant to ensure durability under the most extreme
✓*Ergonomically shaped for easy connection and disconnection.*
✓*Compact flat face that eliminates leaks and contamination of the circuit.*
✓*Manufactured under ISO 16028.*

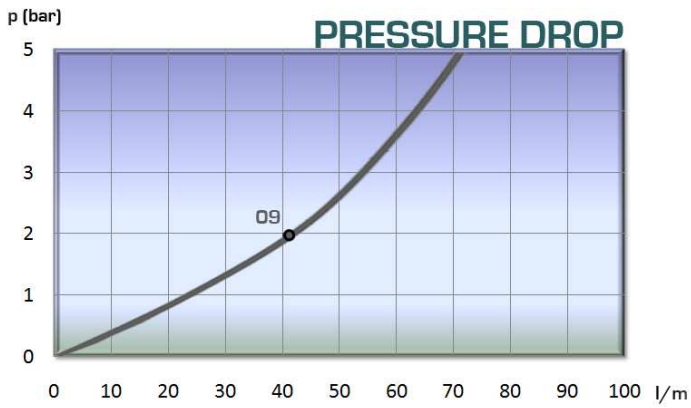

131 SERIES CPR CAPS

CPR SERIES CAPS have been designed to protect FEMALE (coupler) or MALE (nipple) parts while they are disconnected.
Manufactured according to ISO 16028 norm.

MODEL STRUCTURE

For caps

Example;

131.5313 AA

Series	Material	Part	Colour	Size	Standard
131.	**5** → Plastic	**3** → F.Cap **4** → M.Cap	**1** →Red **2** →Blue **3** →Yellow **4** →Green **5** →Black **6** →White		AA

	DN
1→ ¼”	07
2→ ⅜”	09
3→ ½”	13
4→ ¾”	15
5→ 1”	17
6→1 ¼”	21
7→1 ½”	30
8→ 2”	45

FEMALE CAP

DN	RED	BLUE	YELLOW	GREEN	BLACK	WHITE
07	131.5311AA	*	*	*	*	*
09	131.5312AA	*	*	*	*	*
13	131.5313AA	*	*	*	*	*
15	131.5314AA	*	*	*	*	*
17	131.5315AA	*	*	*	*	*

MALE CAP

DN	RED	BLUE	YELLOW	GREEN	BLACK	WHITE
07	131.5411AA	*	*	*	*	*
09	131.5412AA	*	*	*	*	*
13	131.5413AA	*	*	*	*	*
15	131.5414AA	*	*	*	*	*
17	131.5415AA	*	*	*	*	*

* Available upon request

* Use 131 instead of 130 in reference to ask for CPR Caps

136 SERIES
DRF

Easy connection to check the pressure of the hydraulic systems in different parts of the circuit.

• Materials

Carbon Steel *EN-10277-3 / AISI 316L / Brass*

Seals: NBR, Viton or EPDM

Back-up-ring: PTFE

Balls: *AISI 1010/1015*
Springs: *Carbon Steel DIN 17233/84(B)*

• Applications: Designed for Oil hydraulic. Quick-release coupling for diagnosis.

- No air inclusion within the circuit.

• Equivalence

Design according to ISO 15171-1 & SAE J1502

• Working temperature (Seals)

	NBR	Viton	EPDM
	+100ºC	+200ºC	+150ºC
	-30ºC	-10ºC	-40ºC

• Sectors: Industrial. Building machinery.

MODEL STRUCTURE

Example;

136.12110BB

Series	Material	Part	Closing	O-Ring	Size	Thread
136.	**1** → Carbon ST **2** → AISI316 **4** → Brass	**1**→ Male **2** → Female	**1**→ Poppet	**0** → Without **1** → NBR **2** → Viton **3** → EPDM	**0** → ⅛" | DN 04	2 letters as per Table of Threads

136 SERIES
DRF

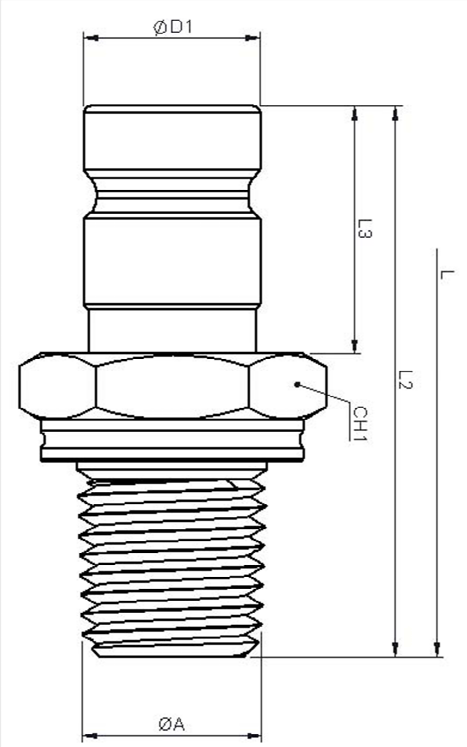

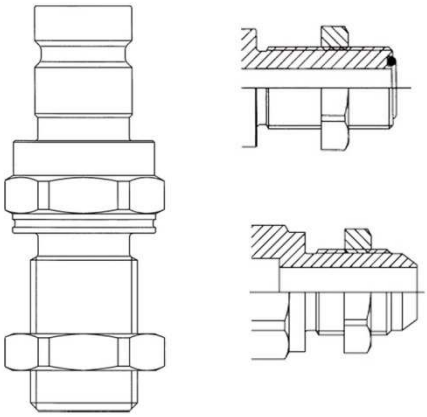

STANDARD MODELS

DN	ØA	STANDARD	REF.		L	L2	L3	CH1	ØD1
04	1/8” NPTF	ANSI B1.20.3	136.11110BL	420Bar	81,25	45,75	17,75	19	12,6
	1/4” NPTF		136.11110BM						
	M14x1,5	ISO 6149-2	136.11110OF						
	3/8” UNF	SAE J1926-2	136.11110HA						
	7/16” UNF		136.11110HB						
	1/2” UNF		136.11110HC						
	9/16” UNF		136.11110HD						
	9/16” UNF	ISO 8434-3	136.11110ZD						
	11/16” UN		136.11110ZE						
	13/16” UN		136.11110ZG						
	7/16” UNF	ISO 8434-2	136.11110YB						
	1/2” UNF		136.11110YC						
	9/16” UNF		136.11110YD						
	M12x1,5	ISO 9974-2	136.11110QE						
	M14x1,5		136.11110QF						
	1/8” BSP	DIN 3852-2	136.11110AL						
	1/4” BSP		136.11110AM						

BULKHEADS

DN	ØA	STANDARD	REF.		L	L2	L3	CH1	ØD1
04	9/16” UNF	ISO 8434-3	136.11110ZDP	420Bar		60,3	17,75	19	12,6
	11/16” UN		136.11110ZEP			62,8			
	13/16” UN		136.11110ZGP			77,1			
	7/16” UNF	ISO 8434-2	136.11110YBP			58			
	1/2” UNF		136.11110YCP			58			
	9/16” UNF		136.11110YDP			60			

Manufactured according to ISO 15171-1, size DN04 under ISO 7241-2 specifications.

DUST CAP – 136.5450AA

136 SERIES
DRF

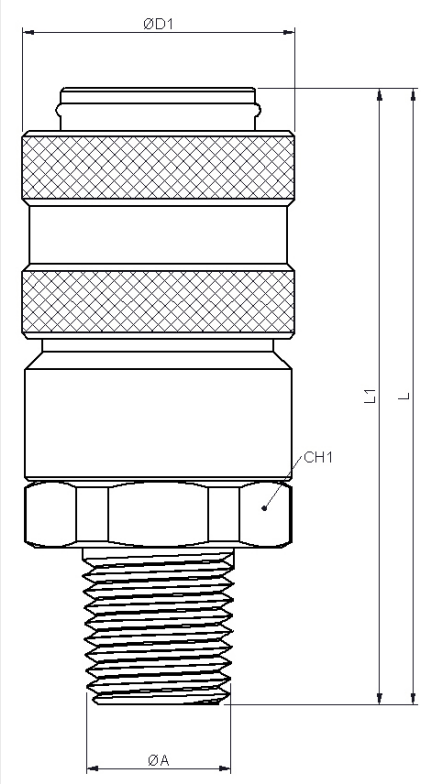

STANDARD MODELS

DN	ØA	STANDARD	REF.		L	L2	L3	CH1	ØD1
04	1/8” NPTF	ANSI B1.20.3	136.12110BL	420Bar	81,25	45,75	17,75	19	12,6
	1/4” NPTF		136.12110BM						
	1/8” BSP	DIN 3852-2	136.12110AL						
	1/4” BSP		136.12110AM						

Manufactured according to ISO 15171-1, size DN04 under ISO 7241-2 specifications.

136 SERIES
DRF

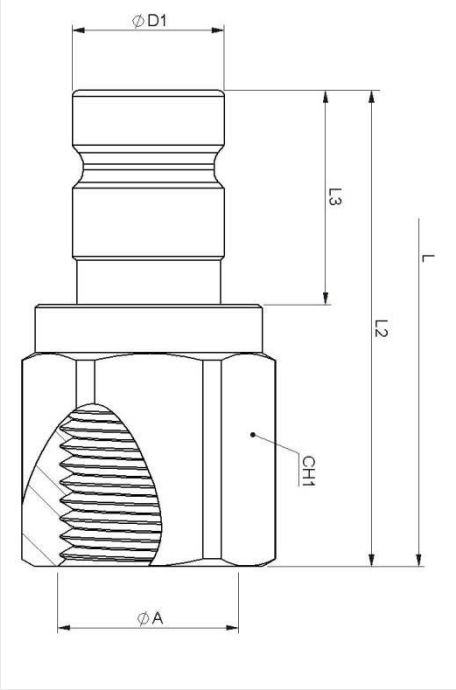

STANDARD MODELS

DN	ØA	STANDARD	REF.		L	L2	L3	CH1	ØD1
04	1/8” BSP	DIN 3852-2	136.11110AA	420Bar	81,25	45,75	17,75	19	12,6
	1/4” BSP		136.11110AB						
	1/8” NPTF	ANSI B1.20.3	136.11110BA						
	1/4” NPTF		136.11110BB						
	M14x1,5	ISO 6149-2	136.11110EF						
	7/16” UNF	SAE J1926-1	136.11110GB						
	9/16” UNF		136.11110GD						
	9/16” UNF	ISO 8434-3	136.11110VD						
	11/16” UN		136.11110VE						
	13/16” UN		136.11110VG						
	7/16” UNF	ISO 8434-2	136.11110UB						
	1/2” UNF		136.11110UC						
	9/16” UNF		136.11110UD						
	3/4” UNF		136.11110UF						

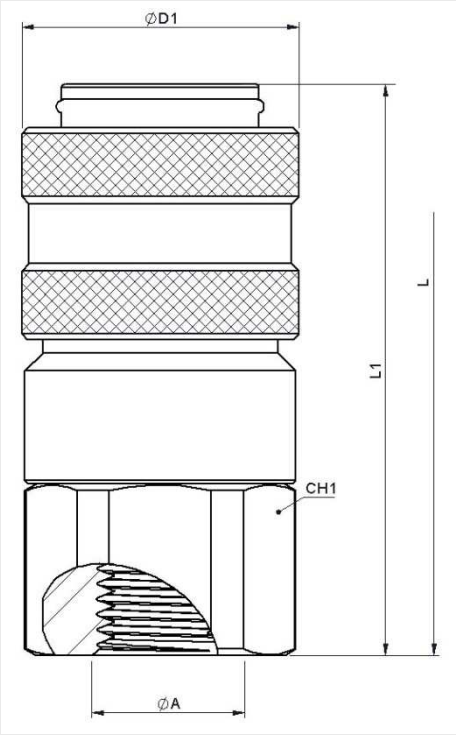

STANDARD MODELS

DN	ØA	STANDARD	REF.		L	L1	L3	CH1	ØD1
04	1/8” BSP	DIN 3852-2	136.12110AA	420Bar	81,25	54	17,75	19	12,6
	1/4” BSP		136.12110AB						
	1/8” NPTF	ANSI B1.20.3	136.12110BA						
	1/4” NPTF		136.12110BB						
	M14x1,5	ISO 6149-2	136.12110EF						
	7/16” UNF	SAE J1926-1	136.12110GB						
	9/16” UNF		136.12110GD						
	9/16” UNF	ISO 8434-3	136.12110VD						
	11/16” UN		136.12110VE						
	13/16” UN		136.12110VG						
	7/16” UNF	ISO 8434-2	136.12110UB						
	1/2” UNF		136.12110UC						
	9/16” UNF		136.12110UD						
	3/4” UNF		136.12110UF						

Manufactured according to ISO 15171-1, size DN04 under ISO 7241-2 specifications.

136 SERIES
DRF

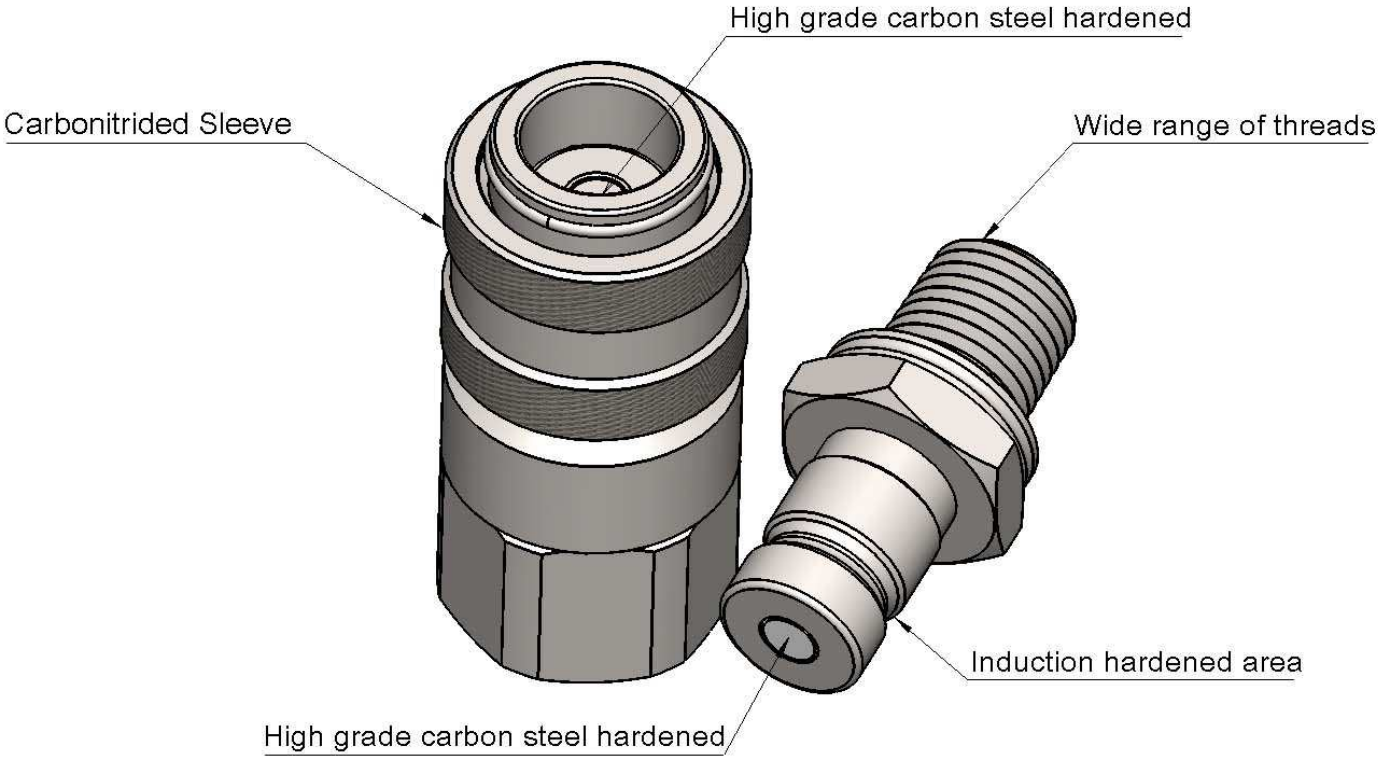

TECHNICAL DATA Carbon Steel

DN	Max. Flow	Connection Force	Min. Burst Pressure (bar)			Max. Working Pressure	Fluid Spillage
			Male	Female	Coupled		
04	2 l/m	50N	1900	1500	1400	420Bar	Máx. 0,02

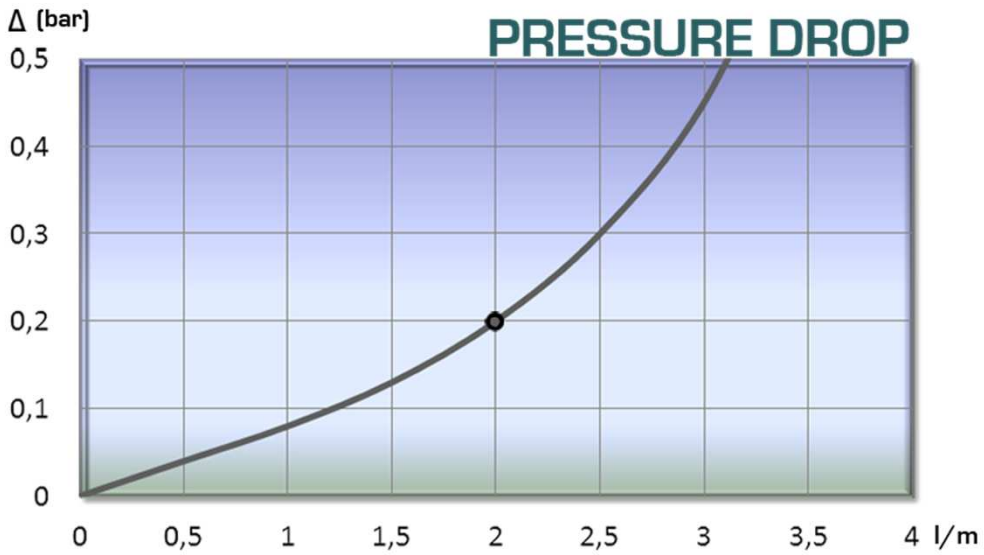

140 SERIES
CVF

Free flow (without valve)
BSP Threads, other threads available upon request.

• Materials

Carbon Steel *EN-10277-3 / AISI 316L / Brass*

Seals: NBR, Viton or EPDM

Back-up-ring: PTFE

Balls: *AISI 1010/1015*
Springs: *Carbon Steel DIN 17233/84(B)*

• Applications: Designed for Oil hydraulic Applications according to European Directive 97.23.EC

• Equivalence

GROMELLE 7000

• Working temperature (Seals)

NBR	Viton	EPDM
+100ºC	+200ºC	+150ºC
-30ºC	-10ºC	-40ºC

• Sectors: Industrial, High pressure cleaning systems

MODEL STRUCTURE

Example;

140.11001 AB

Series	Material	Part	Closing	O-Ring	Size	Thread
140.	**1** → Carbon ST **2** → AISI316 **4** → Brass	**1**→ Male **2** → Female	**0** → Without	**0** → Without **1** → NBR **2** → Viton **3** → EPDM	**1** → ¼" DN 06 **2** → ⅜" DN 10 **3** → ½" DN 13	2 letters as per Table of Threads

140 SERIES
CVF

Quick couplings upon request and subjected to minimum quantities.
Nickel-palted product → add 011 at the end of the reference.

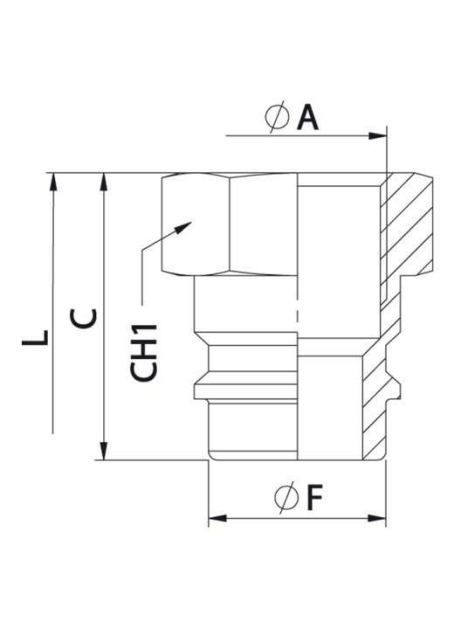

MALE (*CARBON ST.*)

DN	ØA	CH1	C	ØF	L	REF.	
06	¼" BSP	19	25	14,10	45,10	140.11001AB	700 Bar
10	⅜" BSP	22	28	18,90	48,50	140.11002AC	600 Bar
13	½" BSP	27	33	20,40	55,50	140.11003AD	500 Bar

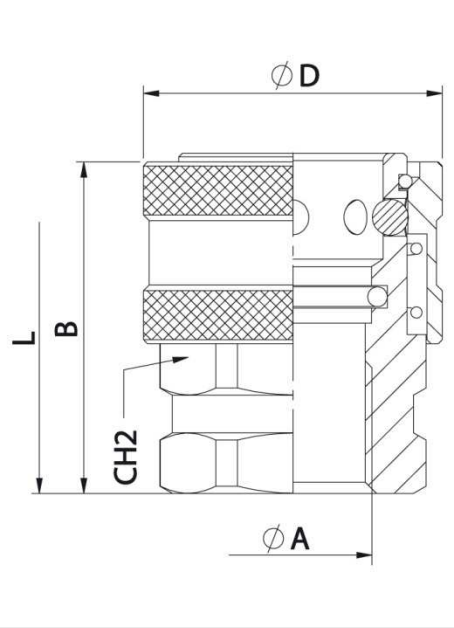

FEMALE (*CARBON ST.*)

DN	ØA	CH2	B	ØD	L	REF.	
06	¼" BSP	22	35	29,50	45,10	140.12011AB	700 Bar
10	⅜" BSP	27	38	34	48,50	140.12012AC	600 Bar
13	½" BSP	32	45	39,50	55,50	140.12013AD	500 Bar

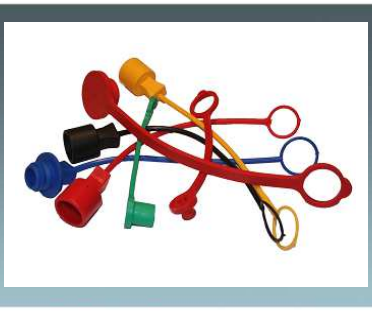

140 SERIES CVF

PLUGS & CAPS

DIN SERIES PLUGS/ CAPS have been designed to protect FEMALE (coupler) or MALE (nipple) parts while they are disconnected.
They have been manufactured according to ISO 5675 norm, DN13 size meets also ISO7241-A requirements

MODEL STRUCTURE

For plugs and caps

Example;

104.5353 AA

Series	Material	Part	Colour	Size	Standard
104. 140.	**1** → Carbon ST **5** → Plastic	**3** → Plug **4** → Cap **5** → Parking	**0** → Plain Metal **1** → Red **2** → Blue **3** → Yellow **4** → Green **5** → Black **6** → White		AA

		DN
1→	¼"	06
2→	⅜"	10
3→	½"	13
4→	¾"	20
5→	1"	25

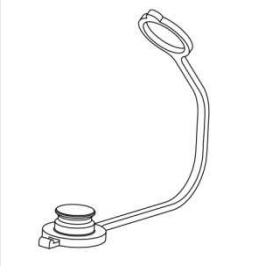

PLUG						
DN	RED	BLUE	YELLOW	GREEN	BLACK	WHITE
06	*	*	*	*	104.5351AA	*
10	*	*	*	*	104.5352AA	*
13	*	*	*	*	101.5353AA	*
20	*	*	*	*	104.5354AA	*
25	*	*	*	*	104.5355AA	*

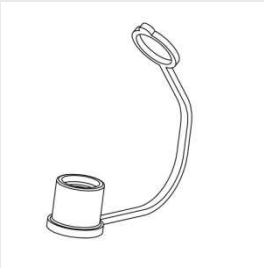

CAP						
DN	RED	BLUE	YELLOW	GREEN	BLACK	WHITE
06	*	*	*	*	104.5451AA	*
10	*	*	*	*	104.5452AA	*
13	*	*	*	*	101.5453AA	*
20	*	*	*	*	104.5454AA	*
25	*	*	*	*	104.5455AA	*

* NOT AVAILABLE

190 SERIES
RBP

Designed for low working pressure up to 35Bar.
Only available without valve (free-flow)

• Materials

Brass DIN-EN 12164

Seals: Silicone

Balls: *AISI 316W 14401*
Springs: *AISI302 DIN 17224*

• Working temperature (Seals)

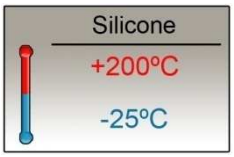

• Applications:

Designed for Hot water Applications according to European Directive 97.23.EC
Special for American market

• Sectors:

Cooling system for moulds

MODEL STRUCTURE

Example;

190.41001 AN

Series	Material	Part	Closing	O-Ring	Size	Thread
190.	**4** → Brass	**1** → Male **2** → Female	**0** → Without	**3** → Silicone	**1** → ¼" (DN 06) **2** → ⅜" (DN 10)	**Male parts:** 2 letters as per Table of Threads **Female parts:** 180ºXX, 90ºXY

190 SERIES
RBP

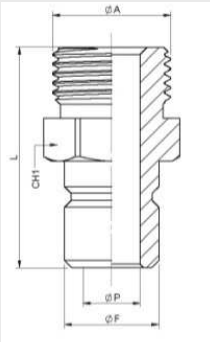

MALE

DN	ØA	CH1	ØF	ØP	L	REF.
2/38	¼"BSP M.	14	9,60	6	26	190.41001AM
3/17	¼"BSP M.		13,30	8	31	190.41002AM
	⅜" BSP M.	27				190.41002AN

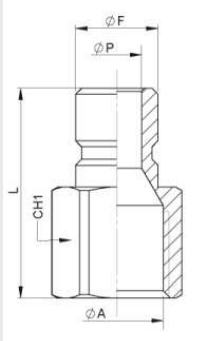

MALE

DN	ØA	CH1	ØF	ØP	L	REF.
2/38	¼"BSP M.	19	9,60	6	26	190.41001AB
3/17	¼" BSP	17	13,30	8	31	190.41002AB
	⅜" BSP M.	27			34	190.41002AC

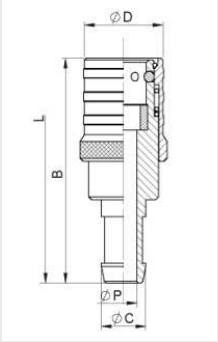

FEMALE

DN	ØD	B	ØC	ØP	L	REF.
2/38	17	56	10	6	71,50	190.42031XX
3/17	23,50	57	13,30	8	82	190.42032XX

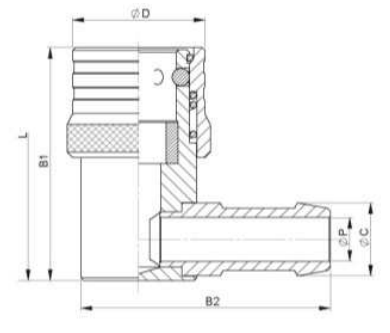

FEMALE

DN	ØD	B1	B2	ØC	ØP	L	REF.
2/38	*	*	*	*	*	*	190.42031XY
3/17	24	42	48	13,30	8	60	190.42032XY

201 SERIES VCR

Designed for elevation systems on trucks.
Reduced drop pressure.
Poppet Valve closing system.

• Materials

Carbon Steel EN10277-3

Seals: NBR, Viton or EPDM

Springs: Carbon Steel DIN 17233/84(B)

• Working temperature (Seals)

	NBR	Viton	EPDM
	+100ºC	+200ºC	+150ºC
	-30ºC	-10ºC	-40ºC

• Applications:

Designed for Oil hydraulic Applications according to European Directive 97.23.EC
Special for American market

• Sectors: Industrial

• Equivalence:

FASTER CVE

EDBRO

MODEL STRUCTURE

Example;

201.11114 AE

Series	Material	Part	Closing	O-Ring	Size		Thread
201.	**1** → Carbon St.	**1** → Male **2** → Female	**1** → Poppet V	**0** → Without **1** → NBR **2** → Viton **3** → EPDM		DN	2 letter as per Table of threads
					4 → ¾"	20	
					5 → 1"	25	

201 SERIES
VCR

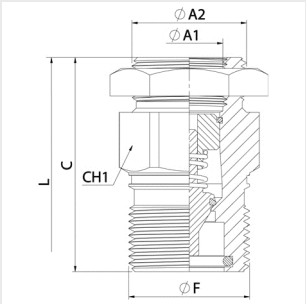

MALE

DN	ØA1	ØA2	CH1	C	ØF	L	REF.	
20	¾" BSP	1 ¼" BSP	46	78	44	138	201.11114AE	350 Bar
25	1" BSP		55	83	53,60	148	201.11115AF	300 Bar

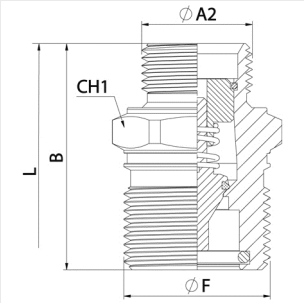

MALE

DN	ØA2	CH1	B	ØF	L	REF.	
20	1" BSP	46	68	44	118,50	201.11114AQ	350 Bar

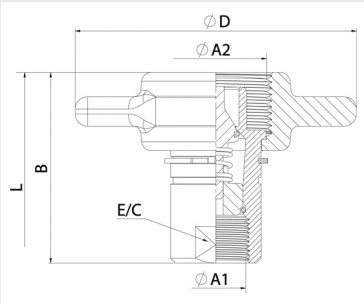

FEMALE

DN	ØA1	ØA2	E/C	B	ØD	L	REF.	
20	¾" BSP	41,50	33	78	115	138	201.12114AE	350 Bar
25	1" BSP	51	40	83	115	148	201.12115AF	300 Bar

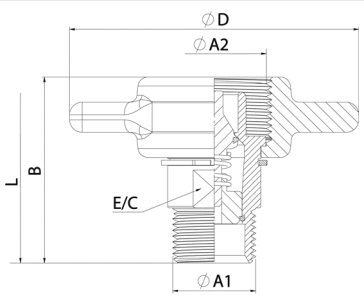

FEMALE

DN	ØA1	E/C	ØA2	B	ØD	L	REF.	
20	1" BSP	33	41,50	74	115	118,50	201.12114AQ	350 Bar

201 SERIES
VCR

TECHNICAL DATA

DN	Rated Flow	Min Burst Pressure (bar)			Max. Working Pressure
		Male	Female	Coupled	
20	120 l/m	1100	1300	1325	350 bar
25	160 l/m	1200	900	1325	300 bar

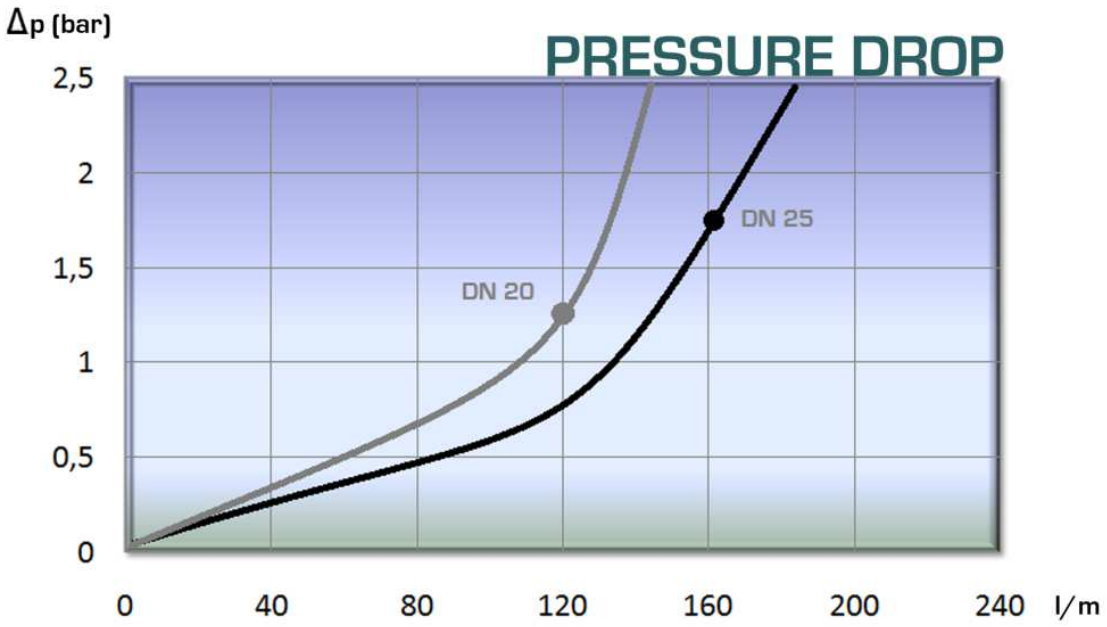

201 SERIES VCR

PLUGS & CAPS

MODEL STRUCTURE

For plugs/caps and parking parts

Example;

201.6304 AA

Series	Material	Part	Colour	Size	Standard
201	**1** → Carbon ST **6** → Aluminium	**3** → Plug **4** → Cap **5** → Parking	0 → Plain Metal	DN **4** → 20 ¾" **5** → 25 1"	AA

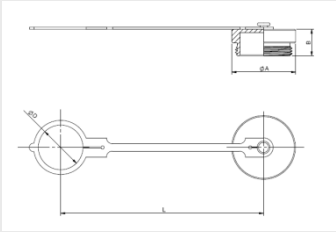

DN	REF.	ØA	L	B	ØD
20	201.6304AA	50	200	25	37,5
25	201.6305AA	60	191	25	42

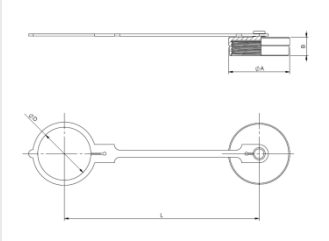

DN	REF.	ØA	L	B	ØD
20	201.6404AA	48	191	13	42
25	201.6405AA	60	191	18	52

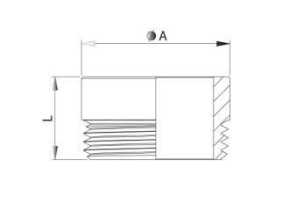

DN	REF.	ØA	L
20	201.1504AA	45	25
25	201.1505AA	55	25

202 SERIES HPA

Designed for cylinders, hand pumps and similar high hydraulic applications.
Ball or Poppet valve closing system available.
NPTF Threads. Other threads upon request.

• Materials

	CARBON STEEL	STAINLESS STEEL
Body	*Carbon Steel EN-10277-3*	*AISI 316L*
Seals	*NBR,Viton or EPDM*	*NBR,Viton or EPDM*
Balls	*AISI 1010/1015*	*AISI316 W. 14401*
Springs	*Carbon Steel DIN 17233/84(B)*	*AISI302 DIN 17224*

• Applications:

Designed for Oil hydraulic Applications according to European Directive 97.23.EC

• Equivalence:

ENERPAC C-604

CEJN 230

PARKER 3000

• Working temperature (Seals)

	NBR	Viton	EPDM
	+100ºC	+200ºC	+150ºC
	-30ºC	-10ºC	-40ºC

• Sectors: Industrial

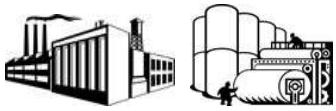

MODEL STRUCTURE

Example;

202. 12242 BN

Series	Material	Part	Closing	O-Ring	Size	Thread
202.	**1** → Carbon St. **2** → AISI 316	**1** → Male **2** → Female	**1** → Poppet V **2** → Ball	**0** → Without **2** → Viton **4** → NBR 90Sh	DN **1** → 06 ¼" **2** → 10 ⅜"	2 letters as per Table of threads

202 SERIES
HPA

POPPET VALVE

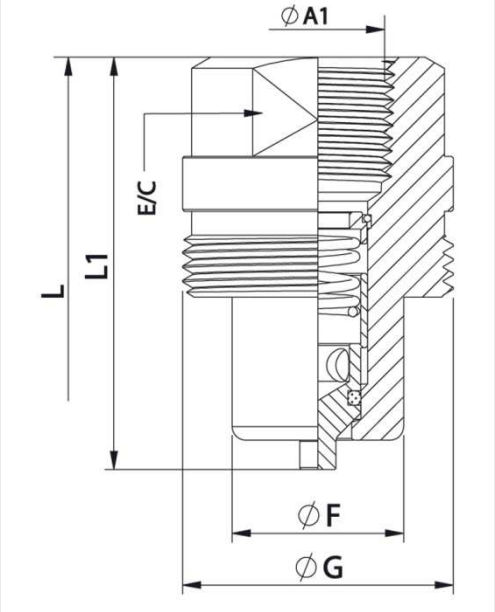

STANDARD *MALE* MODELS

DN	ØA1	REF.		E/C	ØG	L1	ØF	L
06	¼" NPTF	202.11141BB	1200Bar	19	1" UN	38	15,90	60,50
10	⅜" NPTF	202.11142BC	1200Bar	24	1 3/16" UN	44,70	18,99	72,75

STAINLESS STEEL *MALE* MODELS

DN	ØA1	REF.		E/C	ØG	L1	ØF	L
06	¼" NPTF	202.21121BB	1200Bar	19	1" UN	38	15,90	60,50
10	⅜" NPTF	202.21122BC	1200Bar	24	1 3/16" UN	44,70	18,99	72,75

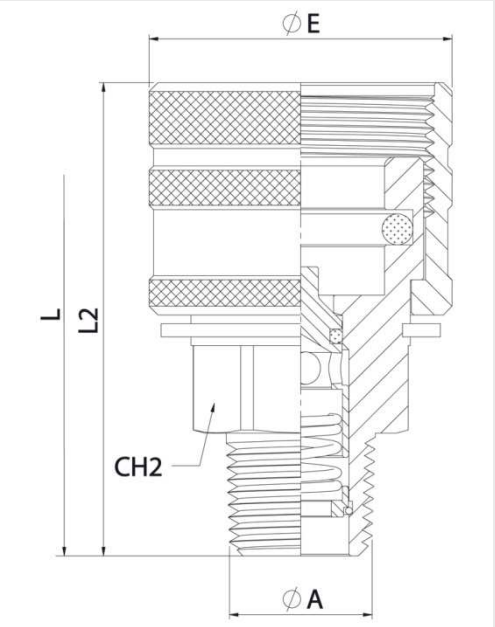

STANDARD *FEMALE* MODELS

DN	ØA	REF.		CH2	L2	ØE	L
06	¼" NPTF M.	202.12141BM	1200Bar	17	41	30	60,50
10	⅜" NPTF M.	202.12142BN	1200Bar	22	54	34,50	72,75

STAINLESS STEEL *FEMALE* MODELS

DN	ØA	REF.		CH2	L2	ØE	L
06	¼" NPTF M.	202.22121BM	1200Bar	17	41	30	60,50
10	⅜" NPTF M.	202.22122BN	1200Bar	22	54	34,50	72,75

202 SERIES
HPA

BALL VALVE

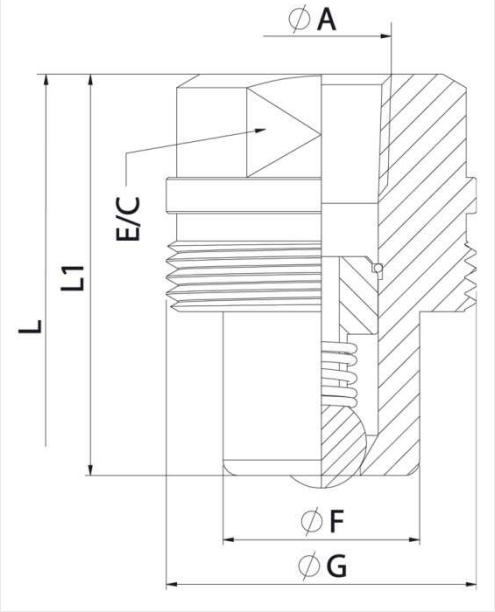

STANDARD *MALE* MODELS

DN	ØA	REF.		E/C	ØG	L1	ØF	L
06	¼" NPTF	202.11201BB	700Bar	19	1" UN	34	15,90	75,5
10	⅜" NPTF	202.11202BC	700Bar	24	1 3/16" UN	38,88	18,99	87,14

STAINLESS STEEL *MALE* MODELS

DN	ØA	REF.		E/C	ØG	L1	ØF	L
06	¼" NPTF	202.21201BB	700Bar	19	1"UN	34	15,90	75,5
10	⅜" NPTF	202.21202BC	700Bar	24	1 3/16" UN	38,88	18,99	87,14

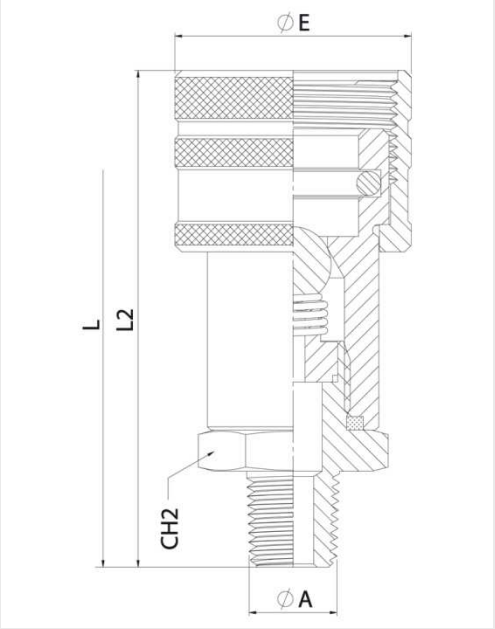

STANDARD *FEMALE* MODELS

DN	ØA	REF.		CH2	L2	ØD	L
06	¼" NPTF M.	202.12241BM	700Bar	19	53	30	75,5
10	⅜" NPTF M.	202.12242BN	700Bar	24	64	34,50	87,14

STAINLESS STEEL *FEMALE* MODELS

DN	ØA	REF.		CH2	L2	ØD	L
06	¼" NPTF M.	202.22221BM	700Bar	19	53	30	75,5
10	⅜" NPTF M.	202.22222BN	700Bar	24	64	34,50	87,14

202 SERIES HPA

PLUGS & CAPS

HPA SERIES PLUGS and CAPS have been designed to protect FEMALE (coupler) or MALE (nipple) parts while they are disconnected.

MODEL STRUCTURE

Example;

202.6302 AA

Series	Material	Part	Colour	Size	Standard
202.	**2** → AISI 316 **5** → Plastic **6** → Aluminium	**3**→ Plug **4**→ Cap	**0** → Plain Metal 5 → Black	DN **1**→ ¼" 06 **2**→ ⅜" 10	AA

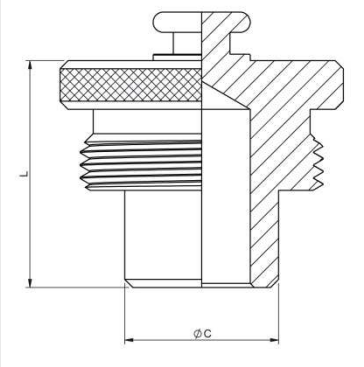

METAL PLUG

DN	ALUMINUM	AISI 316	ØC	L
06	202.6301AA	202.2301AA	15,85	24
10	202.6302AA	202.2302AA	19	28

PLASTIC PLUG

DN	PLASTIC	ØC	L
06	202.5351AA	15,7	24
10	202.5352AA	19	28

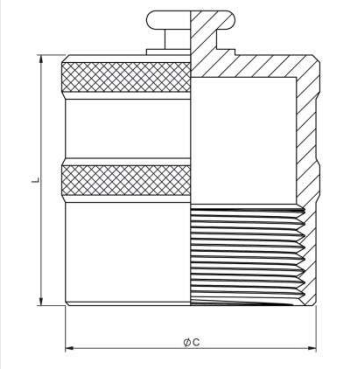

METAL CAP

DN	ALUMINUM	AISI 316	ØC	L
06	202.6401AA	202.2401AA	29	28
10	202.6402AA	202.2402AA	34	34

PLASTIC CAP

DN	PLASTIC	ØC	L
06	202.5451AA	29	25
10	202.5452AA	34	34

203 SERIES
TGW

Designed for high pressure applicaitons.
Poppet Valve closing system.
BSP, NPTF threads and other upon request.

• Materials

Carbon Steel *EN-10277-3 , AISI 316 and AISI 303*

Seals: NBR, Viton or EPDM

Back-up-ring: PTFE

Springs: *Carbon Steel DIN 17233/84(B)*

• Applications:

Designed for Oil hydraulic Applications according to European Directive 97.23.EC
Special for American market

• Equivalence

GROMELLE 6000
TUTHILL 6000

• Working temperature (Seals)

	NBR	Viton	EPDM
	+100ºC	+200ºC	+150ºC
	-30ºC	-10ºC	-40ºC

• Sectors: Industrial

MODEL STRUCTURE

Example;

203.11115 AF

Series	Material	Part	Closing	O-Ring	Size	Thread
203.	**1** → Carbon ST **2** → AISI316	**1** → Male **2** → Female	**0** → Without **1** → Poppet V. **2** → Ball	**0** → Without **1** → NBR **2** → Viton **3** → EPDM		2 letters as per Table of Threads

	DN
1 → ¼"	06
2 → ⅜"	10
3 → ½"	13
4 → ¾"	20
5 → 1"	25
6 →1 ¼"	32
7 →1 ½"	40
8 → 2"	50

203 SERIES
TGW

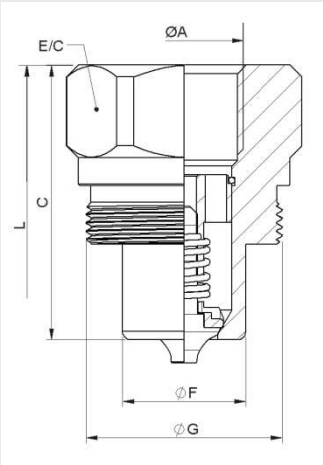

MALE

DN	E/C	C	ØF	ØG	L
06	30	36	14,90	M27x1,5	72
10	32	40,50	18,95	M30x1,5	81
13	38	46	22	M35x1,5	92
20	48	56	28,95	M45x1,5	112
25	60	63	36	M54x1,5	126
32	58	75	49,80	M70x2	150
40	61	83,50	55	M78x2	167
50	71	118	69,40	M92x2	237

STANDARD MODELS

DN	ØA	MALE	FEMALE	
06	¼" BSP	203.11111AB	203.12111AB	950Bar
	¼" NPTF	203.11111BB	203.12111BB	
10	⅜" BSP	203.11112AC	203.12112AC	750Bar
	⅜" NPTF	203.11112BC	203.12112BC	
13	½" BSP	203.11113AD	203.12113AD	
	½" NPTF	203.11113BD	203.12113BD	
20	¾" BSP	203.11114AE	203.12114AE	650Bar
	¾" NPTF	203.11114BE	203.12114BE	
25	1" BSP	203.11115AF	203.12115AF	450Bar
	1" NPTF	203.11115BF	203.12115BF	
32	1 ¼" BSP	203.11116AG	203.12116AG	
	1 ¼" NPTF	203.11116BG	203.12116BG	
40	1 ½" BSP	203.11117AH	203.12117AH	300Bar
	1 ½" NPTF	203.11117BH	203.12117BH	
50	2" BSP	203.11118AI	203.12118AI	
	2" NPTF	203.11118BI	203.12118BI	

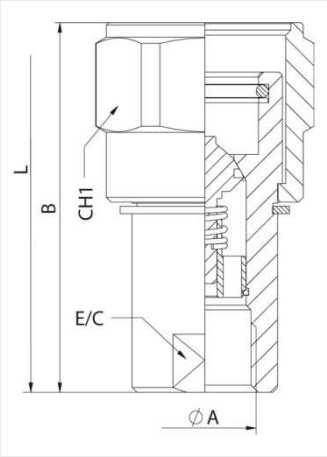

FEMALE

DN	E/C	B	CH1	L
06	19	59	32	72
102	22	67	36	81
13	27	73,50	41	92
20	35	89,50	50	112
25	41	105,50	65	126
32	58	130,50	80	150
40	61	143,50	85	167
50	71	203,50	105	237

203 SERIES
TGW

TECHNICAL DATA

DN	Rated Flow	Min Burst Pressure (bar)			Max. Working Pressure
		Male	Female	Coupled	
06	18 l/m	3650	3500	3800	950 bar
10	38 l/m	3000	2900	3000	750 bar
13	62 l/m	2950	3000	3000	750 bar
20	116 l/m	2520	2500	2600	650 bar
25	194 l/m	1800	1650	1800	450 bar
32	290 l/m	1700	1650	1800	450 bar
40	318 l/m	1100	1250	1200	300 bar
50	365 l/m	1100	1100	1200	300 bar

* Safety factor 1:4
Carbon Steel Models

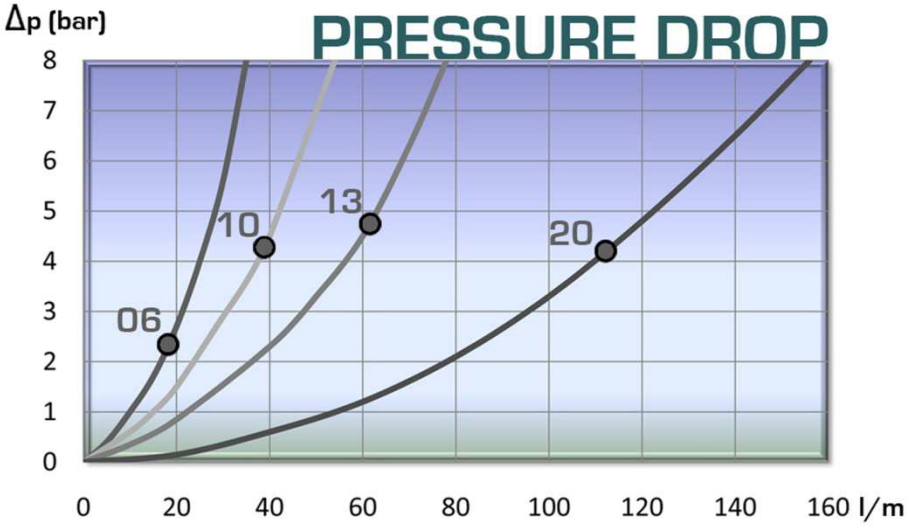

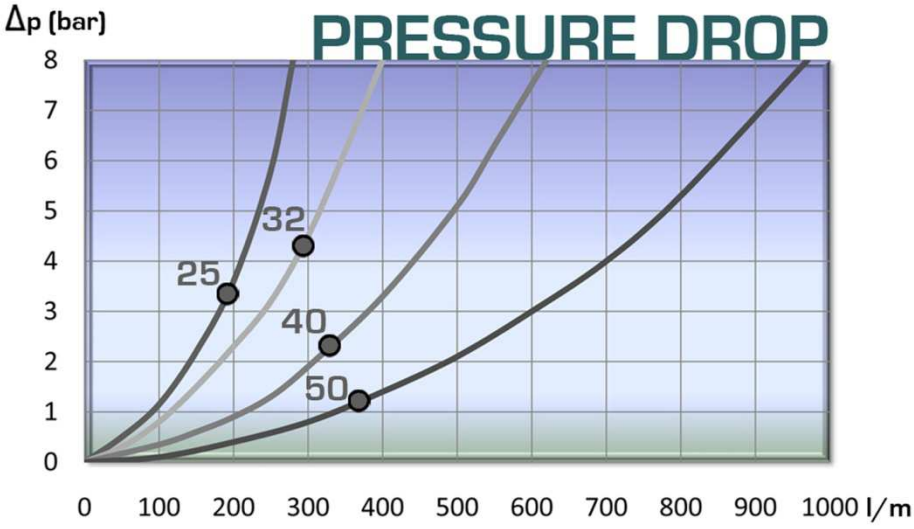

203 SERIES TGW

PLUGS & CAPS

TGW SERIES PLUGS, CAPS and have been designed to protect FEMALE (coupler) or MALE (nipple) parts while they are disconnected.

MODEL STRUCTURE

Example;

203.6404 AA

Series	Material	Part	Colour	Size	Standard
203.	**1** → Carbon St **6** → Aluminium	**3** → Plug **4** → Cap	**0** → Plain Metal	DN	AA

	DN
1 → ¼”	06
2 → ⅜”	10
3 → ½”	13
4 → ¾”	20
5 → 1”	25
6 →1 ¼”	32
7 →1 ½”	40
8 → 2”	50

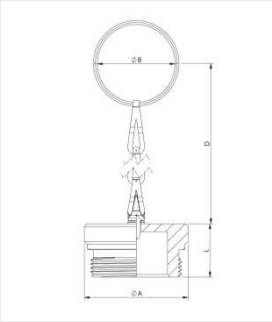

PLUG

DN	REF.	ØA	L	ØB
06	203.6301AA	32	18,50	25
10	203.6302AA	35	20,50	30
13	203.6303AA	40	20,50	
20	203.6304AA	50	25,50	42
25	203.6305AA	60	27	50
32	203.6306AA	75	39	
40	203.6307AA	85	41	
50	203.6308AA	99	43	

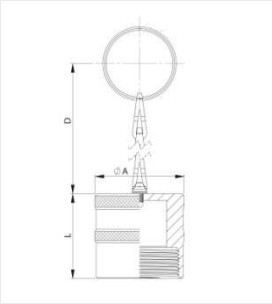

CAP

DN	REF.	ØA	L	ØB
06	203.6401AA	32	30	25
10	203.6402AA	35	37	30
13	203.6403AA	40	38	
20	203.6404AA	50	46	42
25	203.6405AA	60	55	50
32	203.6406AA	75	77	
40	203.6407AA	85	74	
50	203.6408AA	100	121	

204 SERIES
AEV

Designed for Spanish market.
Poppet Valve closubg system.
BSP threads and other avaible upon request.

• Materials

Carbon Steel *EN-10277-3*

Seals: NBR, Viton or EPDM

Springs: *Carbon Steel DIN 17233/84(B)*

• Working temperature (Seals)

	NBR	Viton	EPDM
	+100ºC	+200ºC	+150ºC
	-30ºC	-10ºC	-40ºC

• Applications:

Designed for Oil hydraulic Applications according to European Directive 97.23.EC
Special for American market

• Sectors: Agricultural

MODEL STRUCTURE

Example;

204.12113 AD

Series	Material	Part	Closing	O-Ring	Size	Thread
204.	**1** → Carbon ST	**1** → Male **2** → Female	**0** → Without **1** → Poppet V. **2** → Ball	**0** → Without **1** → NBR **2** → Viton **3** → EPDM	**3** → ½" | DN 13	2 letters as per Table of Threads

204 SERIES
AEV

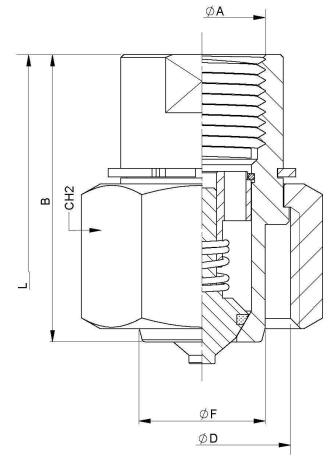

MALE

DN	ØA	E/C	CH2	B	ØF	ØD	L	REF.	
13	½" BSP	25	36	49,5	21,80	30,50	88	204.11113AD	400 Bar

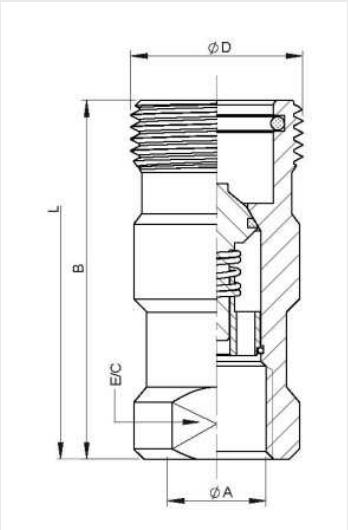

FEMALE

DN	ØA	E/C	B	ØD	L	REF.	
13	½" BSP	27	69,5	33	88	204.12113AD	400Bar

204 SERIES
AEV

CAPS

MODEL STRUCTURE

Example;

204.1303 AA

Series	Material	Part	Colour	Size	Standard
204.	**1** → Carbon St	**4** → Cap	**0** → Plain Metal	DN **3** → ½" | 13	AA

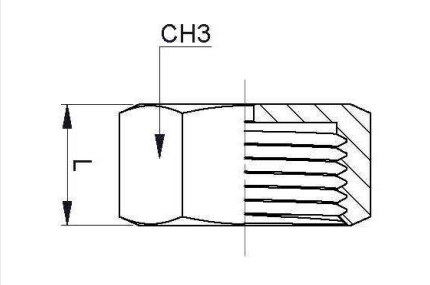

CAP

DN	REF.	CH3	L
13	204.1303AA	36	20

205 SERIES
STG

BSP / NPTF
DIN3852 / SAE

Poppet valve closing system
BSP, NPTF, DIN2353, DIN3852, SAE/ORB and other threads upon request.
AISI 316 available only by minimum quantities.

• Materials

Carbon Steel *EN-10277-3 / AISI 316L*

Seals: NBR, Viton or EPDM

Back-up-ring: PTFE

Springs: *Carbon Steel DIN 17233/84(B)*

• Applications:

Designed for Oil hydraulic Applications according to European Directive 97.23.EC
Special for American market

• Equivalence

FASTER CVV
ARGUS HD
VOSWINKEL HS

• Working temperature (Seals)

	NBR	Viton	EPDM
	+100ºC	+200ºC	+150ºC
	-30ºC	-10ºC	-40ºC

• Sectors:

Industrial, Agricultural, Construction machinery.

MODEL STRUCTURE

Example;

205.12115 AF

Series	Material	Part	Closing	O-Ring	Size	Thread
205.	**1** → Carbon ST **2** → AISI316	**1** → Male **2** → Female	**0** → Without **1** → Poppet V. **2** → Ball	**0** → Without **1** → NBR **2** → Viton **3** → EPDM		2 letters as per Table of Threads

	DN
1 → ¼"	06
2 → ⅜"	10
3 → ½"	13
4 → ¾"	20
5 → 1"	25
6 → 1 ¼"	32

205 SERIES
STG

BSP / NPTF
DIN3852 / SAE

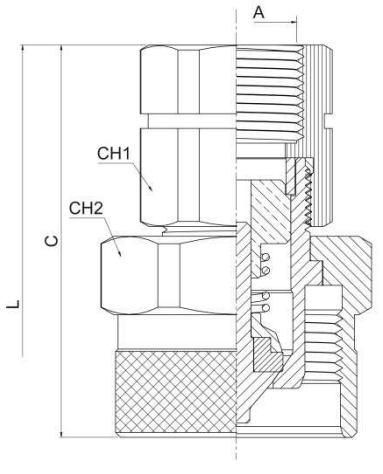

MALE

DN	CH1	CH2	C	ØD	L
06	19	30	59.30	34	94
10	22	30	61,20	34	98
13	27	36	67,50	41,80	109
20	36	41	80	48	135
25	41	55	87,5	59,80	152
32	50	75	142	79,80	241,80

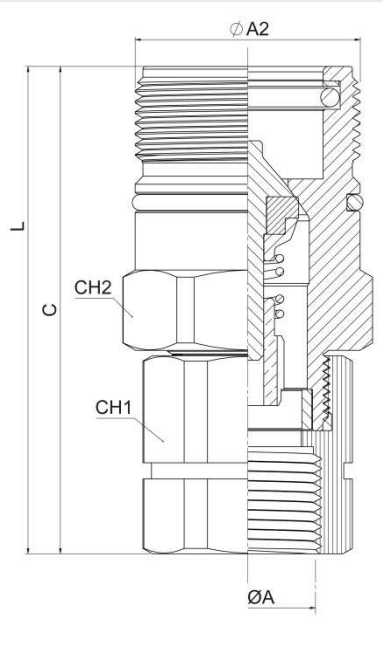

FEMALE

DN	CH1	CH2	C	ØA2	L
06	19	22	60	Rd 24x2	94
10	22	24	64	Rd 28x2	98
13	27	32	70	Rd 36x2	109
20	36	36	86	Rd 42x2	135
25	41	41	100	Rd 48x3	152
32	50	60	150	Rd 70x3	241,80

STANDARD MODELS

DN	ØA	MALE	FEMALE	
06	¼" BSP	205.11111AB	205.12111AB	450Bar
	¼" NPTF	205.11111BB	205.12111BB	
	M14x1,5	205.11111NC	205.12111NC	
10	¼" BSP	205.11112AB	205.12112AB	
	⅜" BSP	205.11112AC	205.12112AC	
	⅜" NPTF	205.11112BC	205.12112BC	
	M16x1,5	205.11112ND	205.12112ND	
13	⅜" BSP	205.11113AC	205.12113AC	400Bar
	½" BSP	205.11113AD	205.12113AD	
	½" NPTF	205.11113BD	205.12113BD	
	M18x1,5	205.11113NE	205.12113NE	
	M22x1,5	205.11113NG	205.12113NG	
	¾" -16ORB	205.11113GF	205.12113GF	
	⅞" -14ORB	205.11113GH	205.12113GH	
20	¾" BSP	205.11114AE	205.12114AE	
	¾" NPTF	205.11114BE	205.12114BE	
	M22x1,5	205.11114NG	205.12114NG	
25	¾" BSP	205.11115AE	205.12115AE	300Bar
	1" BSP	205.11115AF	205.12115AF	
	1" NPTF	205.11115BF	205.12115BF	
32	1 ¼" BSP	205.11116AG	205.12116AG	410Bar
	1 ¼" NPTF	205.11116BG	205.12116BG	
	1 ½" BSP	205.11116AH	205.12116AH	
	1 ½" NPTF	205.11116BH	205.12116BH	

205 SERIES
STG

BSP / NPTF
DIN3852 / SAE

TECHNICAL DATA

DN	Rated Flow	Min Burst Pressure (bar)			Max. Working Pressure*
		Male	Female	Coupled	
06	12 l/min	1580	1500	1800	450 bar
10	32 l/min	1750	1680	1800	450 bar
13	75 l/min	1580	1500	1600	400 bar
20	145 l/min	1520	1400	1600	400 bar
25	255 l/min	1200	1150	1200	300 bar
32	440 l/min	1450	1520	1650	410 bar

* Safety factor 1:4
Carbon Steel Models

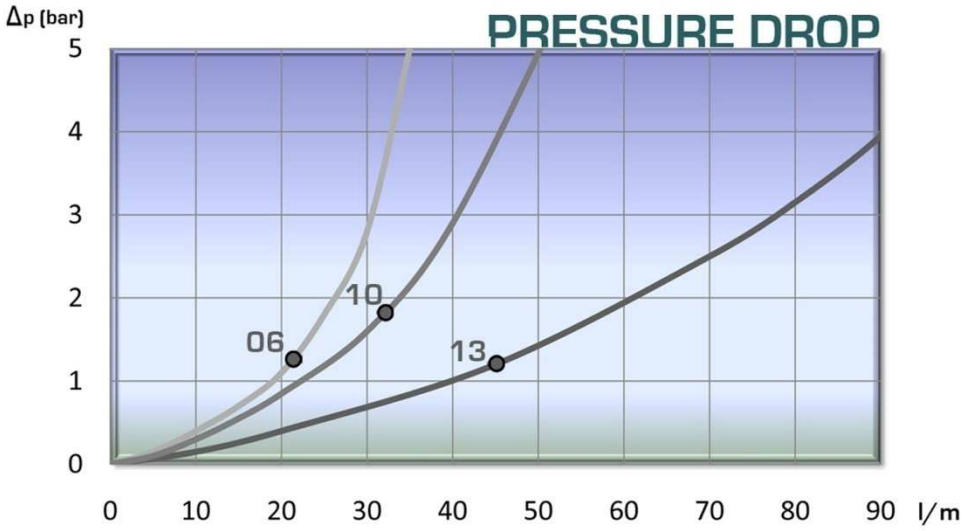

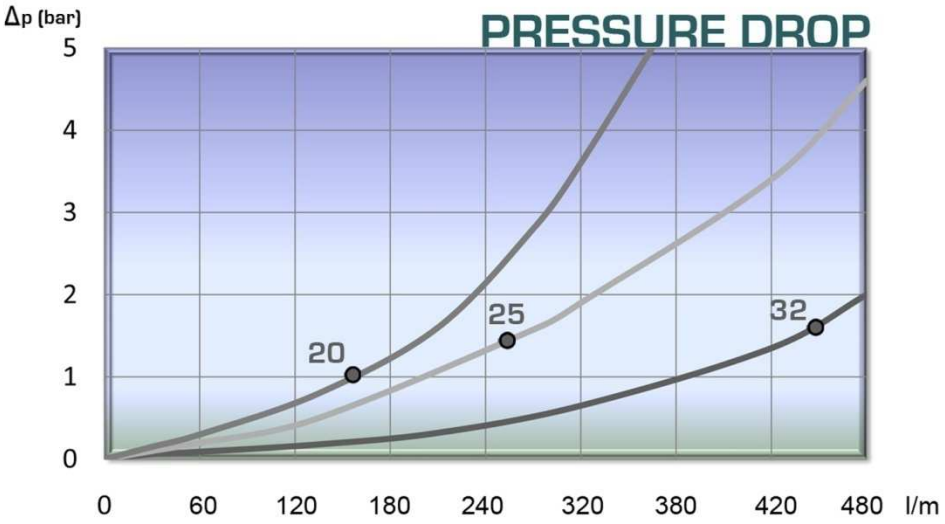

205 SERIES STG

DIN2353

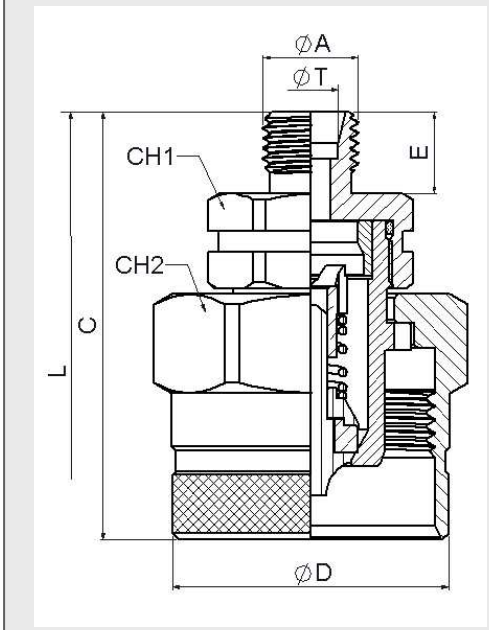

STANDARD MALE MODELS

DN	ØA	ØT	REF.		CH1	CH2	C	ØD	E	L
06	M12x1,5	6L	205.11111JB	450Bar	19	30	49,30	34	12	93,80
	M14x1,5	8L	205.11111JC							
10	M18x1,5	12L	205.11112JE	450Bar	22	30	60,20	34	12	96
	M14x1,5	8L	205.11112JC							
	M16x1,5	10L	205.11112JD							
	M16x1,5	8S	205.11112KD							
	M18x1,5	10S	205.11112KE							
	M20x1,5	12S	205.11112KF							
13	M14x1,5	8L	205.11113JC	400Bar	27	36	63,50	41,80	12	101
	M16x1,5	10L	205.11113JD							
	M18x1,5	12L	205.11113JE							
	M22x1,5	15L	205.11113JG							
	M26x1,5	18L	205.11113JI							
	M18x1,5	10S	205.11113KE							
	M20x1,5	12S	205.11113KF							
	M22x1,5	14S	205.11113KG							
	M24x1,5	16S	205.11113KH							
20	M18x1,5	12L	205.11114JE	400Bar	36	41	72	48	12	119
	M22x1,5	15L	205.11114JG							
	M26x1,5	18L	205.11114JI							124
	M30x2	22L	205.11114JJ				78		18	136
	M22x1,5	14S	205.11114KG				72		12	119
	M24x1,5	16S	205.11114KH							
	M30x2	20S	205.11114KJ				76		16	127
25	M26x1,5	18L	205.11115JI	300Bar	41	55	70,50	59,80	12	146
	M30x2	22L	205.11115JJ						18	
	M36x2	28L	205.11115JK							
	M45x2	35L	205.11115JM				68,50		16	142
	M30x2	20S	205.11115KJ							
	M36x2	25S	205.11115KK				70,50		18	146
	M42x2	30S	205.11115KL		46					
	M52x2	38S	205.11115KN		55				20	150
32	M42x2	30S	205.11116KL	410Bar	50	75	143	79,80	20	243,80
	M52x2	38S	205.11116KN		55					

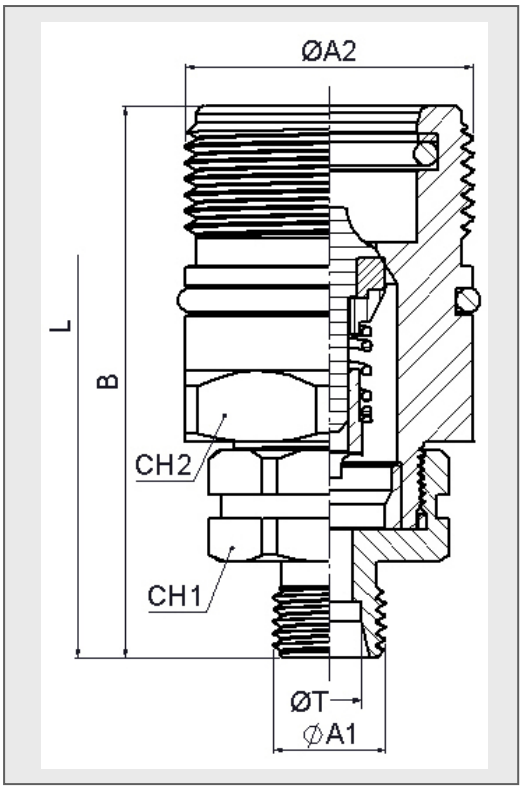

STANDARD FEMALE MODELS

DN	ØA	ØT	REF.		CH1	CH2	B	ØA2	E	L
06	M12x1,5	6L	205.12111JB	450Bar	19	22	59	Rd 24x2	12	93,80
	M14x1,5	8L	205.12111JC							
10	M18x1,5	12L	205.12112JE	450Bar	22	24	63	Rd 28x2	12	96
	M14x1,5	8L	205.12112JC							
	M16x1,5	10L	205.12112JD							
	M16x1,5	8S	205.12112KD							
	M18x1,5	10S	205.12112KE							
	M20x1,5	12S	205.12112KF							
13	M14x1,5	8L	205.12113JC	400Bar	27	32	66	Rd 36x2	12	101
	M16x1,5	10L	205.12113JD							
	M18x1,5	12L	205.12113JE							
	M22x1,5	15L	205.12113JG							
	M26x1,5	18L	205.12113JI							
	M18x1,5	10S	205.12113KE							
	M20x1,5	12S	205.12113KF							
	M22x1,5	14S	205.12113KG							
	M24x1,5	16S	205.12113KH							
20	M18x1,5	12L	205.12114JE	400Bar	36	36	78	Rd 42x2	12	119
	M22x1,5	15L	205.12114JG							
	M26x1,5	18L	205.12114JI							
	M30x2	22L	205.12114JJ				84		18	131
	M22x1,5	14S	205.12114KG				78		12	119
	M24x1,5	16S	205.12114KH							
	M30x2	20S	205.12114KJ				82		16	127
25	M26x1,5	18L	205.12115JI	300Bar	41	41	91	Rd 48X3	12	146
	M30x2	22L	205.12115JJ				97		18	
	M36x2	28L	205.12115JK				97			
	M45x2	35L	205.12115JM				95			142
	M30x2	20S	205.12115KJ						16	
	M36x2	25S	205.12115KK				97		18	146
	M42x2	30S	205.12115KL		46					
	M52x2	38S	205.12115KN		55		99		20	150
32	M42x2	30S	205.12116KL	410Bar	50	60	151	Rd 70x3	20	243,80
	M52x2	38S	205.12116KN		55					

205 SERIES STG

DIN2353

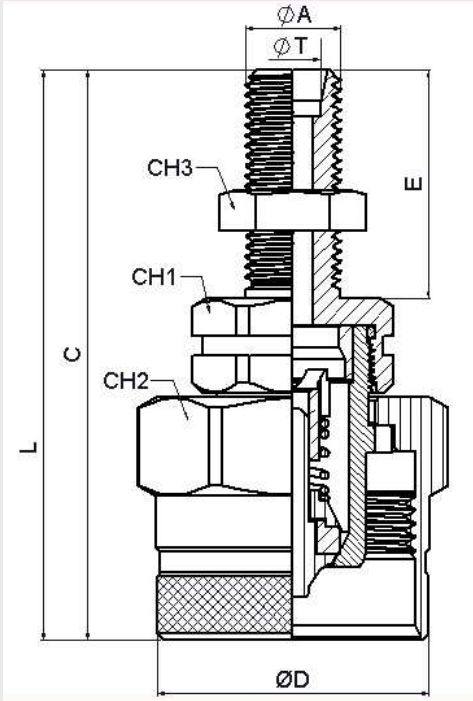

STANDARD MALE MODELS

DN	ØA	ØT	REF.		CH1	CH2	CH3	C	ØD	E	L
06	M12x1,5	6L	205.11111LB	450Bar	19	30	19	71,30	34	25	128.80
	M14x1,5	8L	205.11111LC					80,30		34	146,80
10	M14x1,5	8L	205.11112LC	450Bar	22	30	19	81,50	34	34	151,50
	M16x1,5	10L	205.11112LD				22	65,20		26	127,50
	M16x1,5	8S	205.11112MD					75,20		27	138,20
	M18x1,5	10S	205.11112ME				24				
	M20x1,5	12S	205.11112MF				22				
13	M14x1,5	8L	205.11113LC	400Bar	27	36	19	85,50	41,80	34	156,50
	M16x1,5	10L	205.11113LD				22	86,50		35	157,50
	M18x1,,5	12L	205.11113LE				24	75,50		24	136,50
	M22x1,5	15L	205.11113LG				27	86,50		33	157,50
	M26x1,5	18L	205.11113LI				30				
	M18x1,5	10S	205.11113ME				24	75,50		24	136,50
	M20x1,5	12S	205.11113MF				22	86,50		35	157,50
	M22x1,5	14S	205.11113MG				27				
	M24x1,5	16S	205.11113MH				30				
20	M18x1,5	12l	205.11114LE	400Bar	36	41	24	86	48	26	157
	M22x1,5	15L	205.11114LG				27	93		33	171
	M26x1,5	18L	205.11114LI				30				
	M30x2	22L	205.11114LJ				36	94		34	173
	M24x1,5	16S	205.11114MH				30	89		29	
	M30x2	20S	205.11114MJ				36	96		36	163
25	M26x1,5	18L	205.11115LI	300Bar	41	55	30	99,50	59,80	33	185,50
	M30x2	22L	205.11115LJ				36	100,50		34	187,50
	M36x2	28L	205.11115LK				41				
	M45x2	35L	205.11115LM				55	102,50		36	191,50
	M30x2	20S	205.11115MJ				36	101,50		35	189,50
	M36x2	25S	205.11115MK				41	104,50		38	195,50
	M42x2	30S	205.11115ML				50	106,50		40	
	M52x2	38S	205.11115MN				65				199,50
32	M42x2	30S	205.11116ML	410Bar	50	75	50	143		40	284

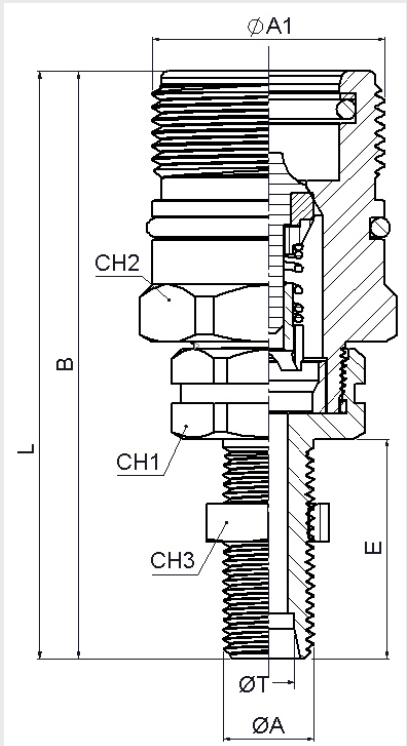

STANDARD FEMALE MODELS

DN	ØA	ØT	REF.		CH1	E/C	CH3	B	ØA1	E	L
06	M12x1,5	6L	205.12111LB	450Bar	19	22	19	72	Rd 24x2	25	128.80
	M14x1,5	8L	205.12111LC					81		34	146,80
10	M14x1,5	8L	205.12112LC	450Bar	22	24	19	85	Rd 28x2	34	151,50
	M16x1,5	10L	205.12112LD				22	77		26	127,50
	M16x1,5	8S	205.12112MD					780		27	138,20
	M18x1,5	10S	205.12112ME				24				
	M20x1,5	12S	205.12112MF				22				
13	M14x1,5	8L	205.12113LC	400Bar	27	32	19	88	Rd36x2	34	156,50
	M16x1,5	10L	205.12113LD				22	89		35	157,50
	M18x1,,5	12L	205.12113LE				24	78		24	136,50
	M22x1,5	15L	205.12113LG				27	89		35	157,50
	M26x1,5	18L	205.12113LI				30				
	M18x1,5	10S	205.12113ME				24	78		24	136,50
	M20x1,5	12S	205.12113MF				22	88		35	157,50
	M22x1,5	14S	205.12113MG				27				
	M24x1,5	16S	205.12113MH				30				
20	M18x1,5	12l	205.12114LE	400Bar	36	36	24	92	Rd 42x2	26	157
	M22x1,5	15L	205.12114LG				27	93		33	171
	M26x1,5	18L	205.12114LI				30				
	M30x2	22L	205.12114LJ				36	99		34	173
	M24x1,5	16S	205.12114MH				30	100		29	
	M30x2	20S	205.12114MJ				36	95		36	163
25	M26x1,5	18L	205.12115LI	300Bar	41	41	30	112	Rd 48x3	33	185,50
	M30x2	22L	205.12115LJ				36	113		34	187,50
	M36x2	28L	205.12115LK				41				
	M45x2	35L	205.12115LM				55	115		36	191,50
	M30x2	20S	205.12115MJ				36	114		35	189,50
	M36x2	25S	205.12115MK				41	117		38	195,50
	M42x2	30S	205.12115ML				50	119		40	
	M52x2	38S	205.12115MN				65				199,50
32	M42x2	30S	205.12116ML	410Bar	50	60	50	171	Rd 70x3	40	284

205 SERIES STG

PLUGS & CAPS

STG SERIES PLUGS, CAPS and have been designed to protect FEMALE (coupler) or MALE (nipple) parts while they are disconnected.

MODEL STRUCTURE

Example;

205.5414 AA

Series	Material	Part	Colour	Size	Standard
205.	**1** → Carbon ST **2** → AISI 316 **5** → Plastic	**3** → Plug **4** → Cap	**0** →Plain Metal **1** →Red		AA

	DN
1 → ¼”	06
2 → ⅜”	10
3 → ½”	13
4 → ¾”	20
5 → 1”	25
6 →1 ¼”	32

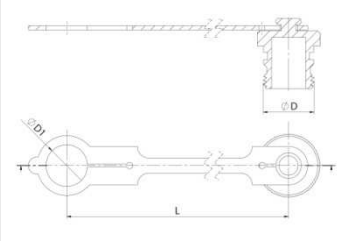

PLUG

DN	REF.	ØD	ØD1	L
06	205.5311AA	Rd 24x2	20	90
10	205.5312AA	Rd 28x2	24	100
13	205.5313AA	Rd 36x2	29,50	135
20	205.5314AA	Rd 42x2	37	187
25	205.5315AA	Rd 48x3	41	145
32	205.5316AA	Rd 70x3	55	200

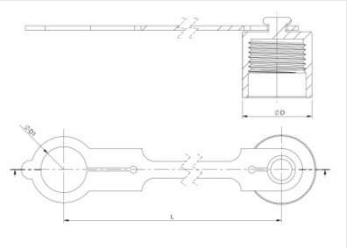

CAP

DN	REF.	ØD	ØD1	L
06	205.5411AA	Rd 24x2	20	90
10	205.5412AA	Rd 28x2	24	100
13	205.5413AA	Rd 36x2	29,50	135
20	205.5414AA	Rd 42x2	37	187
25	205.5415AA	Rd 48x3	41	145
32	205.5416AA	Rd 70x3	55	200

206 SERIES
SRK

DIN 2353

DIN2353 and other threads available upon request.
AISI 316 available but only for minimum quantities.

• Materials

Carbon Steel *EN-10277-3 / AISI 316L*

Seals: NBR, Viton or EPDM

Back-up-ring: PTFE

Springs: *Carbon Steel DIN 17233/84(B)*

• Applications:

Designed for Oil hydraulic Applications according to European Directive 97.23.EC

• Equivalence:

Voswinkel Serie RH
Argus Serie RK

• Working temperature (Seals)

	NBR	Viton	EPDM
	+100ºC	+200ºC	+150ºC
	-30ºC	-10ºC	-40ºC

• Sectors: Industrial, Agricultural, Construction machinery.

MODEL STRUCTURE

Example;

206.12115 AF

Series	Material	Part	Closing	O-Ring	Size	Thread
206.	**1** → Carbon ST **2** → AISI316	**1** → Male **2** → Female	**0** → Without **1** → Poppet V.	**0** → Without **1** → NBR **2** → Viton **3** → EPDM		2 letters as per Table of Threads

	DN
1 → ¼"	06
2 → ⅜"	10
3 → ½"	13
4 → ¾"	20
5 → 1"	25
6 → 1 ¼"	32

206 SERIES
SRK

DIN 2353

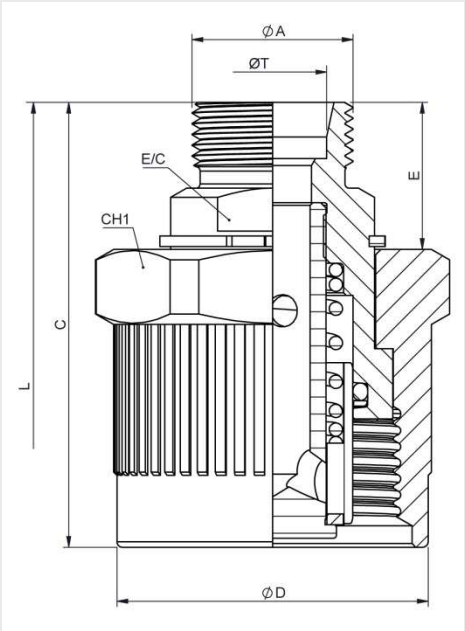

STANDARD MALE MODELS

DN	ØA	ØT	REF.		CH1	E/C	C	ØD	E	L
10	M14x1,5	8L	206.11112JC	400 Bar	32	22	62,5	39	21,5	103,5
	M16x1,5	10L	206.11112JD							
	M18x1,5	12L	206.11112JE							
	M18x1,5	10S	206.11112KE							
	M20x1,5	12S	206.11112KF							
	M22x1,5	15L	206.11112JG							
	M22x1,5	14S	206.11112KG							
	M24x1,5	16S	206.11112KH							
13	M18x1,5	12L	206.11113JE	300 Bar	46	24	70	45	20	119
	M22x1,5	15L	206.11113JG							
	M22x1,5	14S	206.11113KG							
	M24x1,5	16S	206.11113KH							
	M26x1,5	18L	206.11113JI							
20	M26x1,5	18L	206.11114JI	320 Bar	60	32	83	59,1	27,4	140
	M30x2	22L	206.11114JJ							
	M30x2	20S	206.11114KJ							
	M36x2	25S	206.11114KK							
25	M30x2	22L	206.11115JJ	300 Bar	55	41	105	63,9	35	144
	M30x2	20S	206.11115KJ							
	M36x2	28L	206.11115JK							
	M36x2	25S	206.11115KK							
	M42x2	30S	206.11115KL							
32	M45x2	35L	206.11116JM	420 Bar	*	55	133	90	38	227
	M52x2	38S	206.11116KN							

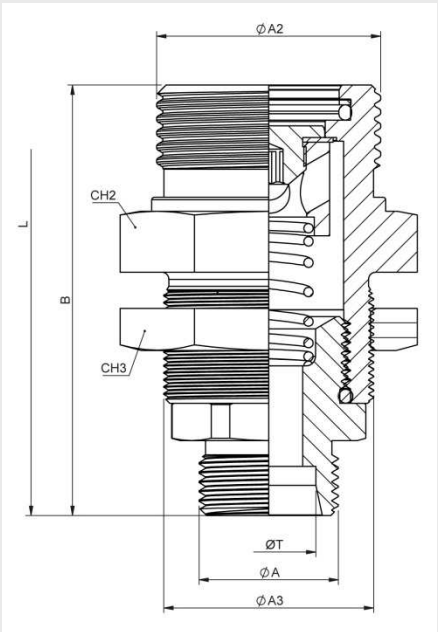

STANDARD FEMALE MODELS

DN	ØA	ØT	REF.		ØA2	ØA3	CH2	CH3	E	B	L
10	M14x1,5	8L	206.12112JC	400 Bar	Rd 32x3	M30x1	36	36	31	55	103,5
	M16x1,5	10L	206.12112JD								
	M18x1,5	12L	206.12112JE								
	M18x1,5	10S	206.12112KE								
	M20x1,5	12S	206.12112KF								
	M22x1,5	15L	206.12112JG								
	M22x1,5	14S	206.12112KG								
	M24x1,5	16S	206.12112KH								
13	M18x1,5	12L	206.12113JE	300 Bar	Rd 36x3	M36x1	41	41	37,5	65	119
	M22x1,5	15L	206.12113JG								
	M22x1,5	14S	206.12113KG								
	M24x1,5	16S	206.12113KH								
	M26x1,5	18L	206.12113JI								
20	M26x1,5	18L	206.12114JI	320 Bar	Rd 48x3	M45x1,5	55	55	44	79	140
	M30x2	22L	206.12114JJ								
	M30x2	20S	206.12114KJ								
	M36x2	25S	206.12114KK								
25	M30x2	22L	206.12115JJ	300 Bar	Rd 54x4	M54x1,5	55	60	46	89	144
	M30x2	20S	206.12115KJ								
	M36x2	28L	206.12115JK								
	M36x2	25S	206.12115KK								
	M42x2	30S	206.12115KL								
32	M45x2	35L	206.12116JM	420 Bar	Rd 79x4	*	55	133	90	38	227
	M52x2	38S	206.12116KN								

206 SERIES
SRK

DIN2353

TECHNICAL DATA

DN	Rated Flow	Min Burst Pressure (bar)			Max. Working Pressure*
		Male	Female	Coupled	
10	29 l/min	1500	1580	1600	400 bar
13	72 l/min	1200	1150	1200	300 bar
20	135 l/min	1250	1300	1280	320 bar
25	250 l/min	1200	1150	1200	300 bar
32	430 l/min	1550	1600	1680	420 bar

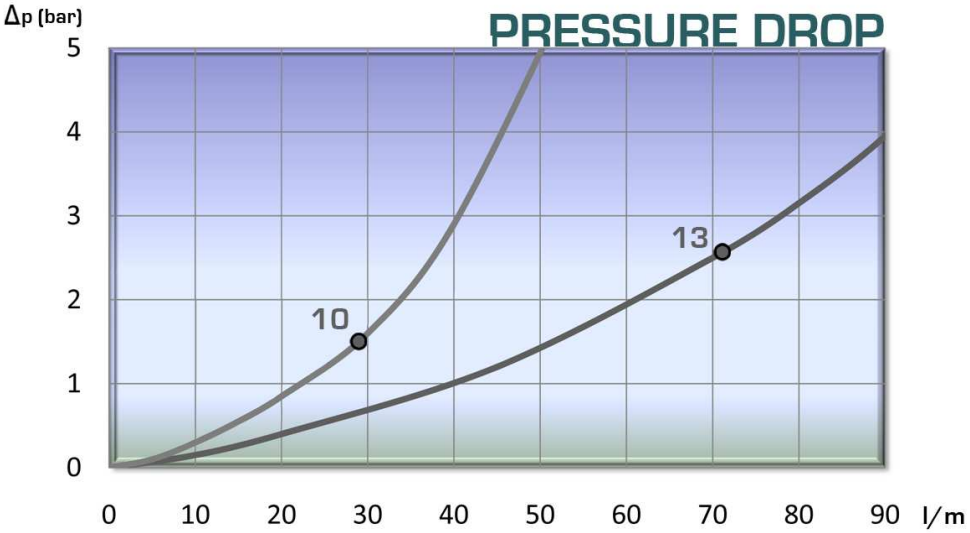

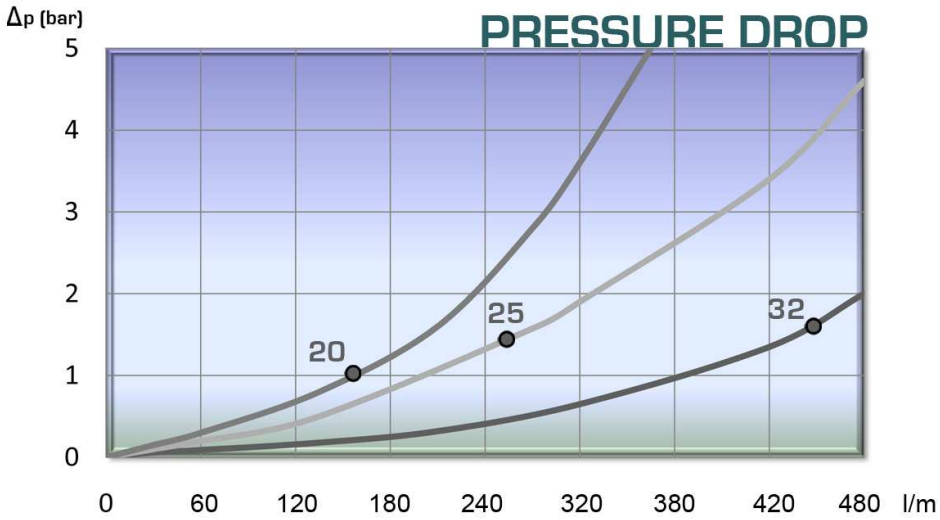

206 SERIES SRK

PLUGS & CAPS

SRK SERIES PLUGS, CAPS and have been designed to protect FEMALE (coupler) or MALE (nipple) parts while they are disconnected.

MODEL STRUCTURE

Example;

206.6403 AA

Series	Material	Part	Colour	Size	Standard
206.	**1** → Carbon St **6** → Aluminium	**3** → Plug **4** → Cap	**0** → Plain Metal		AA

	DN
2 → ⅜"	10
3 → ½"	13
4 → ¾"	20
5 → 1"	25
6 → 1 ¼"	32

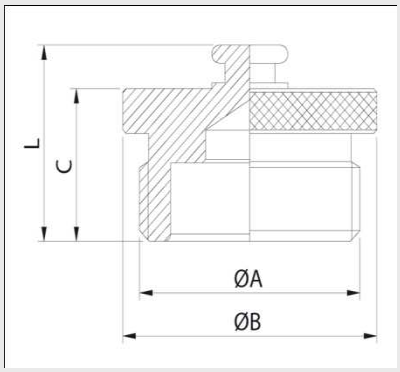

PLUG

DN	REF.	ØA	ØB	C	L
10	206.6302AA	32x3	39	25	31
13	206.6303AA	36x3	44,5	25	31
20	206.6304AA	48x3	59	32	38
25	206.6305AA	54x4	64	39	45
32	206.6306AA	79x4	89,5	44	50

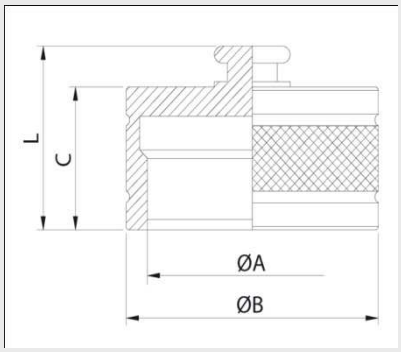

CAP

DN	REF.	ØA	ØB	C	L
10	206.6402AA	32x3	39	26	32
13	206.6403AA	36x3	44,5	24	30
20	206.6404AA	48x3	59	34	40
25	206.6405AA	54x4	64	42	48
32	206.6406AA	79x4	89,5	74	80

207 SERIES CAT

DIN3852 and other threads available upon request.
AISI 316 available but only for minimum quantities.

• Materials

Carbon Steel *EN-10277-3 / AISI 316L*

Seals: NBR, Viton or EPDM

Back-up-ring: PTFE

Springs: *Carbon Steel DIN 17233/84(B)*

• Applications:

Designed for Oil hydraulic Applications according to European Directive 97.23.EC

• Equivalence:

DNP VAV

• Working temperature (Seals)

	NBR	Viton	EPDM
	+100ºC	+200ºC	+150ºC
	-30ºC	-10ºC	-40ºC

• Sectors:

Industrial, Agricultural, Construction machinery.

MODEL STRUCTURE

Example;

207.12113 NG

Series	Material	Part	Closing	O-Ring	Size			Thread
207.	**1** → Carbon ST **2** → AISI316	**1** → Male **2** → Female	**0** → Without **1** → Poppet V.	**0** → Without **1** → NBR **2** → Viton **3** → EPDM		DN		2 letters as per Table of Threads
					3 → ½"	13		
					5 → 1"	25		

207 SERIES CAT

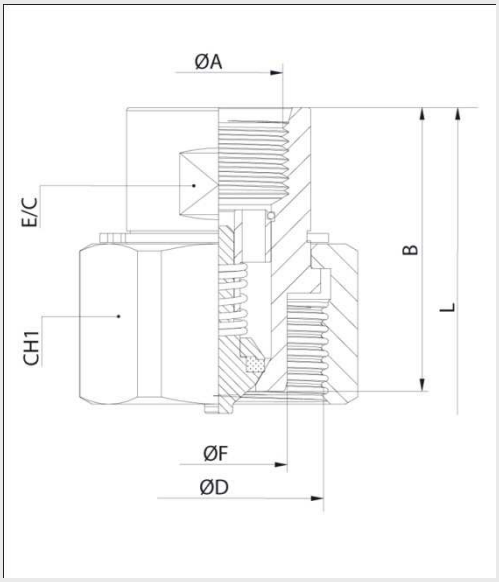

MALE

DN	ØA	E/C	CH1	B	ØF	ØD	L	REF.	
13	M22x1,5	27	41	46	22,25	Rd 35x2	92	207.11113NG	400 Bar
13	½" BSP	27	41	46	22,25	Rd 35x2	92	207.11113AD	400 Bar
25	M30x1,5	38	65	68	38	Rd 54x3	134	207.11115NS	360 Bar
25	1" BSP	38	65	68	38	Rd 54x3	134	207.11115AF	360 Bar

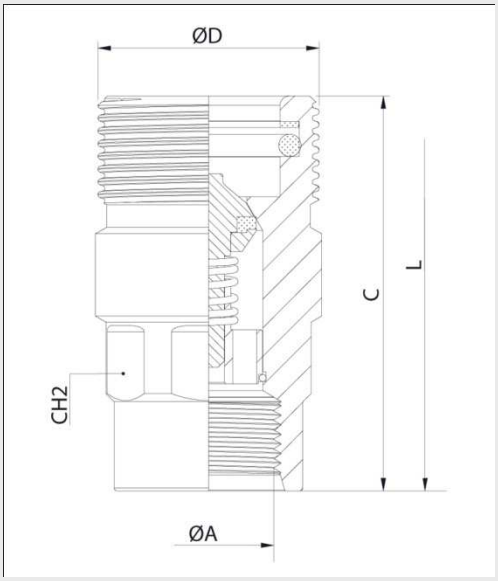

FEMALE

DN	ØA	CH2	C	ØD	L	REF.	
13	M22x1,5	30	62	Rd 35x2	92	207.12113NG	400Bar
13	½" BSP	30	62	Rd 35x2	92	207.12113AD	400Bar
25	M30x1,5	46	96	Rd 54x3	134	207.12115NS	360 Bar
25	1" BSP	46	96	Rd 54x3	134	207.12115AF	360 Bar

207 SERIES CAT

PLUGS & CAPS

CAT SERIES PLUGS, CAPS and have been designed to protect FEMALE (coupler) or MALE (nipple) parts while they are disconnected.

MODEL STRUCTURE

Example;

207.6403 AA

Series	Material	Part	Colour	Size	Standard
207.	**1** → Carbon St **6** → Aluminium	**3** → Plug **4** → Cap	**0** → Plain Metal	DN **3** → ½" 13 **5** → 1" 25	AA

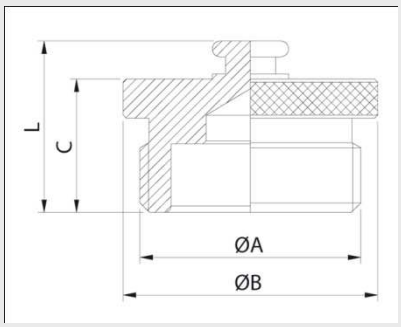

PLUG

DN	REF.	ØA	ØB	C	L
13	207.6303AA	Rd 35x2	40	21	27
25	207.6305AA	Rd 54x3	60	37,5	43,5

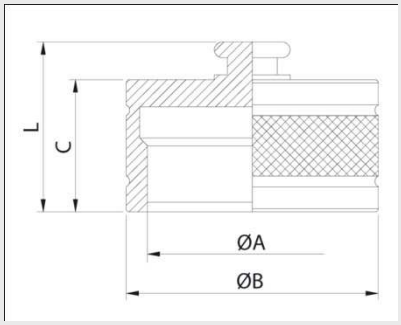

CAP

DN	REF.	ØA	ØB	C	L
13	207.6403AA	Rd 35x2	40	21	27
25	207.6405AA	Rd 54x3	60	29	35

SERIE 231
VPR

Flat Poppet Valve which avoids fluid leakeages during the connection and disconnection.

• Materials

Carbon Steel *EN-10277-3 / AISI 316L*

Seals: NBR. Viton or EPDM

Back-up-ring: PTFE

Balls: *AISI 1010/1015*
Springs: *Carbon Steel DIN 17233/84(B)*

• Applications: Designed for Oil hydraulic Applications according to European Directive 97.23.EC

• Equivalence

Stucchi VEP

• Working temperature (Seals)

	NBR	Viton	EPDM
	+100ºC	+200ºC	+150ºC
	-30ºC	-10ºC	-40ºC

• Sectors: Industrial, Building Machinery

MODEL STRUCTURE

Example;

231.12313 AD

Series	Material	Part	Closing	O-Ring	Size	Thread
231.	**1** → Carbon ST **2** → AISI316 **8** → Carbon ST NQ	**1** → Male **2** → Female	**1** → Poppet V. **3** → C.U.R.P.*	**1** → NBR **2** → Viton **3** → EPDM		2 letters as per Table of Threads

	DN
0 → ⅛"	04
1 → ¼"	07
2 → ⅜"	09
3 → ½"	13
4 → ¾"	15
5 → 1"	17
6 → 1 ¼"	21
7 → 1 ½"	30
8 → 2"	45

*** C.U.R.P. IS AVAILABLE IN MALE PART ONLY**

SERIE 231
VPR

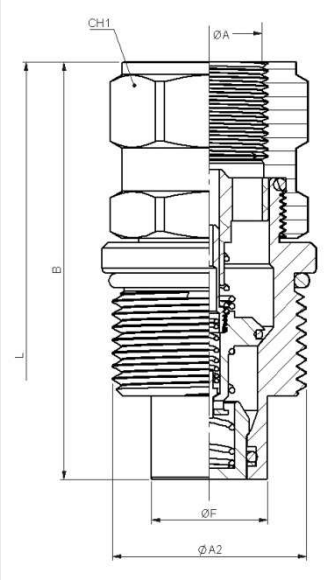

MALE

DN	CH1	B	ØA	ØA2	ØF	L
04	19	70	⅛" BSP	M20x2	11,65	90
07	22	75	¼" BSP	M30x2	12,20	110
09	30	73	⅜ BSP	M33x2	19,80	129
13	36	85,25	½" BSP	M40x3	24,50	155
15	41	97	¾" BSP	M45x3	27,05	165
17	41	110	1" BSP	M50x3	30,00	188
21	55	133	1 ¼" BSP	M58x3	36,00	230
30	65	135	1 ½" BSP	M80x4	57,00	255
45	90	220	2" BSP	M130x6	72,95	385

STANDARD MODELS

DN	ØA	MACHO	HEMBRA	
04	⅛" BSP	231.11110AA	231.12110AA	600Bar
	⅛" NPTF	231.11110BA	231.12110BA	
07	¼" BSP	231.11111AB	231.12111AB	600Bar
	¼" NPTF	231.11111BB	231.12111BB	
09	⅜" BSP	231.11312AC	231.12112AC	550Bar
	⅜" NPTF	231.11312BC	231.12112BC	
	½ " BSP	231.11312AD	231.12112AD	
	½ " NPTF	231.11312BD	231.12112BD	
	¾ "-16ORB	231.11312GF	231.12112GF	
	⅞ "-14ORB	231.11312GH	231.12112GH	
13	½" BSP	231.11313AD	231.12113AD	
	½" NPTF	231.11313BD	231.12113BD	
	¾" BSP	231.11313AE	231.12113AE	
	¾" NPTF	231.11313BE	231.12113BE	
	⅞" - 14ORB	231.11313GH	231.12113GH	
	1 1/16" 12ORB	231.11313GK	231.12113GK	
15	¾" BSP	231.11314AE	231.12114AE	
	¾" NPTF	231.11314BE	231.12114BE	
	1 1/16"-12ORB	231.11314GK	231.12114GK	
17	1" BSP	231.11315AF	231.12115AF	500Bar
	1" NPTF	231.11315BF	231.12115BF	
	1 5/16"-12ORB	231.11315GO	231.12115GO	
21	1 ¼" BSP	231.11316AG	231.12116AG	470Bar
	1 ¼" NPTF	231.11316BG	231.12116BG	
30	1 ½" BSP	231.11317AH	231.12117AH	400Bar
	1 ½" NPTF	231.11317BH	231.12117BH	
45	2" BSP	231.11318AI	231.12118AI	350Bar

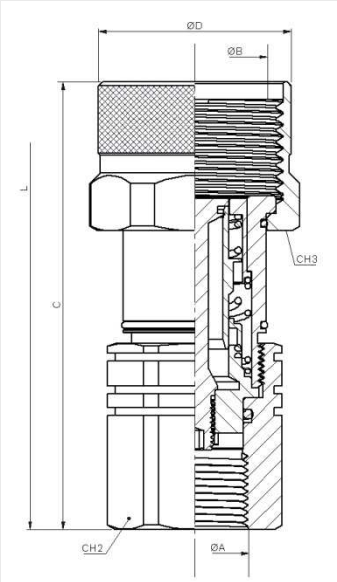

FEMALE

DN	C	CH2	CH3	ØA	ØB	ØD	L
04	50	17	30	⅛" BSP	M20x2	29,5	90
07	55	27	36	¼" BSP	M30x2	26,5	110
09	96	30	38	⅜ BSP	M33x2	37,50	129
13	109	41	46	½" BSP	M40x3	45,50	155
15	116	41	50	¾" BSP	M45x3	49,75	165
17	133	46	55	1" BSP	M50x3	54,50	188
21	159	55	65	1 ¼" BSP	M58x3	64	230
30	160	65	85	1 ½" BSP	M80x4	84	255
45	225	90	-	2" BSP	M130x6	149	385

SERIE 231
VPR

DIN2353

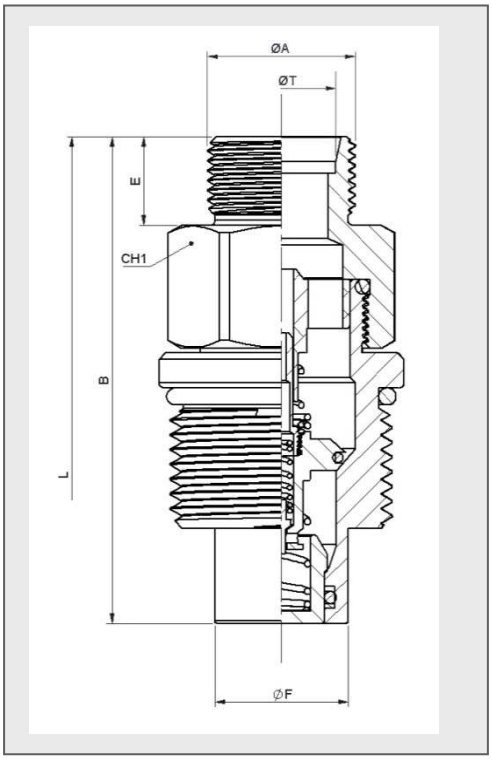

STANDARD MODELS (MALE)

DN	ØA	ØT	REF.		CH1	B	ØF	E	L
07	M12x1,5	6L	231.11111JB	600Bar	22	55	16,2	12	106,2
	M14x1,5	8L	231.11111JC			54		11	104,2
09	⅜" BSP M.	*	231.11312AN	550Bar	30	62,5	19.79	12	124,4
	M14x1,5	8L	231.11312JC			61,5		11	122,2
	M16x1,5	10L	231.11312JD			62,5		12	124,4
	M16x1,5	8S	231.11312KD						
	M18x1,5	10S	231.11312KE						
	M20x1,5	12S	231.11312KF						
13	M14x1,5	8L	231.11313JC	550Bar	36	73	24,58	11	134,9
	M16x1,5	10L	231.11313JD			74		12	136,9
	M18x1,5	12L	231.11313JE						
	M22x1,5	15L	231.11313JG						
	M26x1,5	18L	231.11313JI						
	M18x1,5	10S	231.11313KE						
	M20x1,5	12S	231.11313KF						
	M22x1,5	14S	231.11313KG						
	M24x1,5	16S	231.11313KH						
15	M18x1,5	12I	231.11314JE	550Bar	41	74	27,08	12	139,5
	M22x1,5	15L	231.11314JG						
	M26x1,5	18L	231.11314JI						
	M30x2	22L	231.11314JJ			80		18	151,5
	M22x1,5	14S	231.11314KG			74		12	139,5
	M24x1,5	16S	231.11314KH						
	M30x2	20S	231.11314KJ			80		18	151,5
17	M26x1,5	18L	231.11315JI	500Bar	41	82	30	12	152,2
	M30x2	22L	231.11315JJ			88		18	164,2
	M36x2	28L	231.11315JK		46	81			157,2
	M45x2	35L	231.11315JM					16	151,2
	M30x2	20S	231.11315KJ		41	86		18	163,2
	M36x2	25S	231.11315KK						
	M42x2	30S	231.11315KL		46	81			155,2
	M52x2	38S	231.11315KN		55			20	153,2

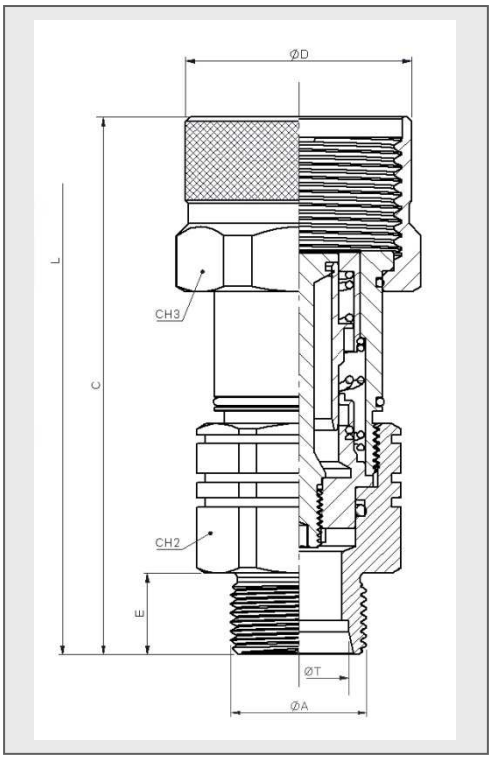

STANDARD MODELS (FEMALE)

DN	ØA	ØT	REF.		CH2	C	ØD	E	L
07	M12x1,5	6L	231.12111JB	600Bar	27	62	27,5	12	106,2
	M14x1,5	8L	231.12111JC			63		11	104,2
09	⅜" BSP M.	*	231.12112AN	550Bar	30	77,5	33	12	124,4
	M14x1,5	8L	231.12112JC			76,5		11	122,2
	M16x1,5	10L	231.12112JD			77,5		12	124,4
	M16x1,5	8S	231.12112KD						
	M18x1,5	10S	231.12112KE						
	M20x1,5	12S	231.12112KF						
13	M14x1,5	8L	231.12113JC	550Bar	41	79,5	38,5	11	134,9
	M16x1,5	10L	231.12113JD			80,5		12	136,9
	M18x1,5	12L	231.12113JE						
	M22x1,5	15L	231.12113JG						
	M26x1,5	18L	231.12113JI						
	M18x1,5	10S	231.12113KE						
	M20x1,5	12S	231.12113KF						
	M22x1,5	14S	231.12113KG						
	M24x1,5	16S	231.12113KH						
15	M18x1,5	12I	231.12114JE	550Bar	41	83,1	42	12	139,5
	M22x1,5	15L	231.12114JG						
	M26x1,5	18L	231.12114JI						
	M30x2	22L	231.12114JJ			89,1		18	151,5
	M22x1,5	14S	231.12114KG			83,1		12	139,5
	M24x1,5	16S	231.12114KH						
	M30x2	20S	231.12114KJ			89,1		18	151,5
17	M26x1,5	18L	231.12115JI	500Bar	46	92	30	12	152,2
	M30x2	22L	231.12115JJ			98		18	164,2
	M36x2	28L	231.12115JK						157,2
	M45x2	35L	231.12115JM			92		16	151,2
	M30x2	20S	231.12115KJ			99		18	163,2
	M36x2	25S	231.12115KK						
	M42x2	30S	231.12115KL			96			155,2
	M52x2	38S	231.12115KN		55	94		20	153,2

SERIE 231
VPR

TECHNICAL DATA

Carbon Steel and Stainless Steel AISI316

DN	Flow Rate	Min. Burst Pressure (Bar)			Max. Working Pressure			Spillage
		Male	Female	Coupled	Male	Female	Coupled	Max.
04	5 l/m	1500	1300	1500	600	430	600	0,011
07	25 l/m	1500	1260	1500	600	420	600	0,012
09	45 l/m	1400	1000	1400	550	330	550	0,040
13	90 l/m	1400	1000	1400	550	330	550	0,025
15	150 l/m	1400	1000	1400	550	330	550	0,033
17	200 l/m	1250	1000	1250	500	330	500	0,018
21	350 l/m	1200	800	1200	470	300	470	0,060
30	750 l/m	1100	800	1100	400	270	400	0,200
45	1000 l/m	1100	800	1100	350	270	350	0,350

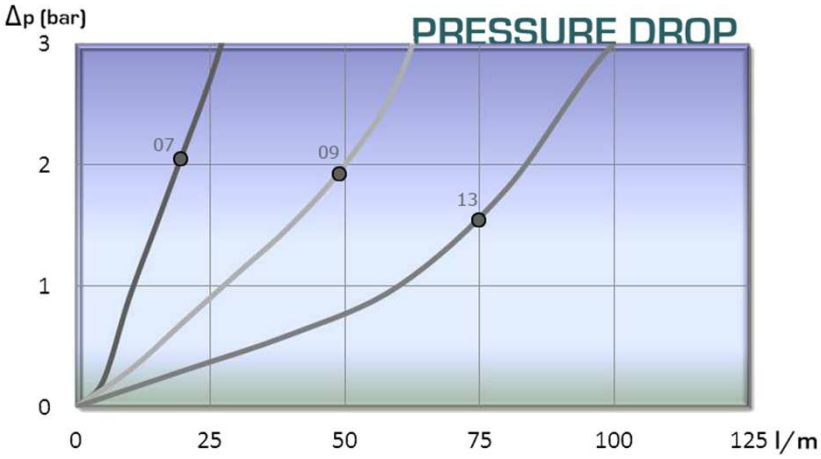

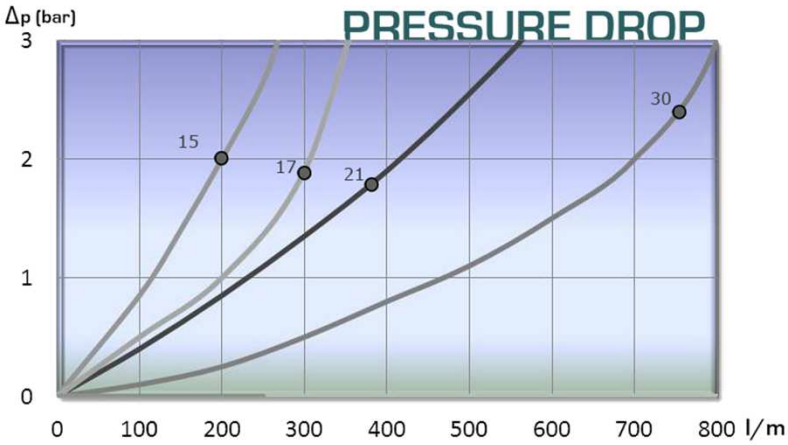

SERIE 231
VPR

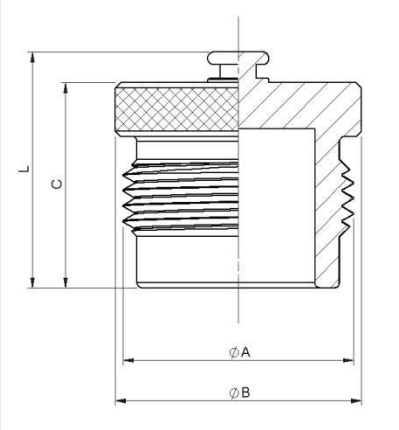

PLUG

DN	REF.	ØA	ØB	C	L
04	231.6300AA	M20x2	25	28	34
07	231.6301AA	M30x2	35	30	36
09	231.6302AA	M33x2	38	32	38
13	231.6303AA	M40x3	46	35	41
15	231.6304AA	M45x3	50	39	45
17	231.6305AA	M50x3	55	50	56
21	231.6306AA	M58x3	65	55	61
30	231.6307AA	M80x4	90	65	71
45	231.6308AA	M130x6	145	85	91

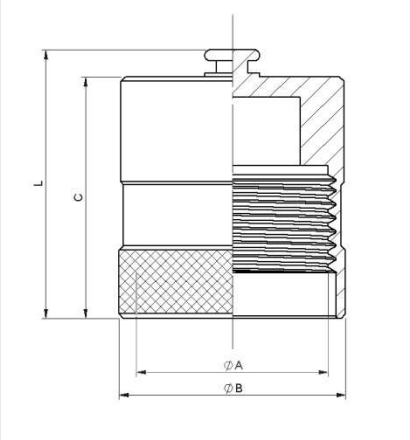

CAP

DN	REF.	ØA	ØB	C	L
04	231.6400AA	M20x2	25	34	40
07	231.6401AA	M30x2	35	45	61
09	231.6402AA	M33x2	38	50	56
13	231.6403AA	M40x3	46	52	58
15	231.6404AA	M45x3	50	55	61
17	231.6405AA	M50x3	55	65	71
21	231.6406AA	M58x3	65	65	71
30	231.6407AA	M80x4	90	80	86
45	231.6408AA	M130x6	145	130	136

402 SERIES

V2RH

BSP / NPTF
ORB/ SAE

Calibrated steel manufacturing.
Available with or without mounting holes.
Thread combination available upon request of minimum quantities.

• Materials

Carbon Steel *EN-10277-3 / AISI 316L / AISI 303*

Seals: NBR, Viton or EPDM

Seating Ball: P.O.M (Delrin®)

Handle: ZAMAK-5

• Applications:

Designed for Oil hydraulic Applications according to European Directive 97.23.EC
Special for American market

• Equivalence

PISTER BKH
MHA BKH
HYDAC KHB
DMIC DVH

• Working temperature (Seals)

	NBR	Viton	EPDM
	+100ºC	+200ºC	+150ºC
	-30ºC	-10ºC	-40ºC

• Sectors:

Industrial, Agricultural.

MODEL STRUCTURE

Example;

402.1015 AF

Series	Material	Mounting H.	O-Ring	Size	Thread
402.	**1** → Carbon ST **2** → AISI316 **3** → AISI303	**0** → No **1** → Yes	**1** → NBR **2** → Viton **3** → EPDM		2 letters as per Table of Threads

	DN
1 → ¼"	06
2 → ⅜"	10
3 → ½"	13
4 → ¾"	20
5 → 1"	25

402 SERIES

V2RH

BSP / NPTF
ORB/ SAE

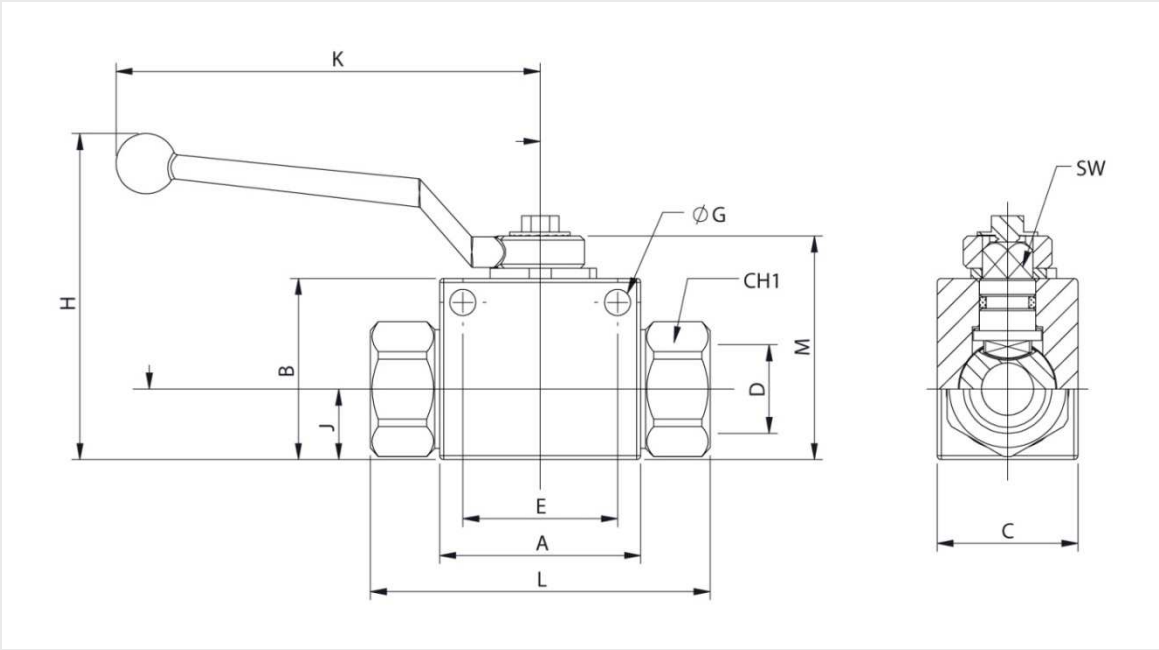

STANDARD MODELS

DN	D	With M.H.	Without M.H.		CH1	L	A	B	M	K	H	J	C	SW	G	E
06	¼" BSP	402.1111AB	402.1011AB	500Bar	22	72,60	40	35	45,50	105,50	71	13	26	8,90	4,50	31,50
	¼" NPTF	402.1111BB	402.1011.BB													
	7/16"-20ORB	402.1111GA	402.1011GA													
10	⅜" BSP	402.1112AC	402.1012AC		27	75,40	45	40	50,50	105,50	76	16	32	8,90	5,20	31,50
	⅜" NPTF	402.1112BC	402.1012BC													
	9/16" ORB	402.1112GC	402.1012GC													
13	½" BSP	402.1113AD	402.1013AD		30	84,50	50	45	55,50	105,50	81	17,50	35	8,90	6,50	38,50
	½" NPTF	402.1113BD	402.1013BD													
	¾" - 16ORB	402.1113GF	402.1013GF													
20	¾" BSP	402.1114AE	402.1014AE	400Bar	41	93,40	60	58	73	159,50	108	23	50	13,90	6,50	48,50
	¾" NPTF	402.1114BE	402.1014BE													
	1 1/16"-12ORB	402.1114GK	402.1014GK													
25	1" BSP	402.1115AF	402.1015AF	350Bar	46	114,50	65	65	80	159,50	115	27,50	57	13,90	8,50	50,50
	1" NPTF	402.1115BF	402.1015BF		46	114,50										
	1 ¼" BSP	402.1115AG	402.1015AG		50	136,50										
	1 ¼" NPTF	402.1115BG	402.1015BG		50	136,50										
	1 ½" BSP	402.1115AH	402.1015AH		55	146,50										
	1 ½" NPTF	402.1115BH	402.1015BH		55	146,50										
	1 5/16"-12ORB	402.1115GO	402.1015GO		46	114,50										

402 SERIES
V2MT DIN 2353

Calibrated steel manufacturing.
Available with or without mounting holes.
Thread combination available upon request of minimum quantities.

• Materials

Carbon Steel *EN-10277-3 / AISI 316L*

Seals: NBR, Viton or EPDM

Seating Ball: P.O.M (Delrin®)

Handle: ZAMAK-5

• Applications:

Designed for Oil hydraulic Applications according to European Directive 97.23.EC
Special for American market

• Equivalence

PISTER BKH
MHA BKH
HYDAC KHB

• Working temperature (Seals)

	NBR	Viton	EPDM
	+100ºC	+200ºC	+150ºC
	-30ºC	-10ºC	-40ºC

• Sectors: Industrial, Agricultural.

MODEL STRUCTURE

Example;

402.1113 JG

Series	Material	Mounting H.	O-Ring	Size	Thread
V2RH 402.	**1** → Carbon ST **2** → AISI316	**0** → No **1** → Yes	**1** → NBR **2** → Viton **3** → EPDM		2 letters as per Table of Threads

	DN
1 → ¼"	06
2 → ⅜"	10
3 → ½"	13
4 → ¾"	20
5 → 1"	25
6 → 1 ¼"	32

402 SERIES
V2MT DIN 2353

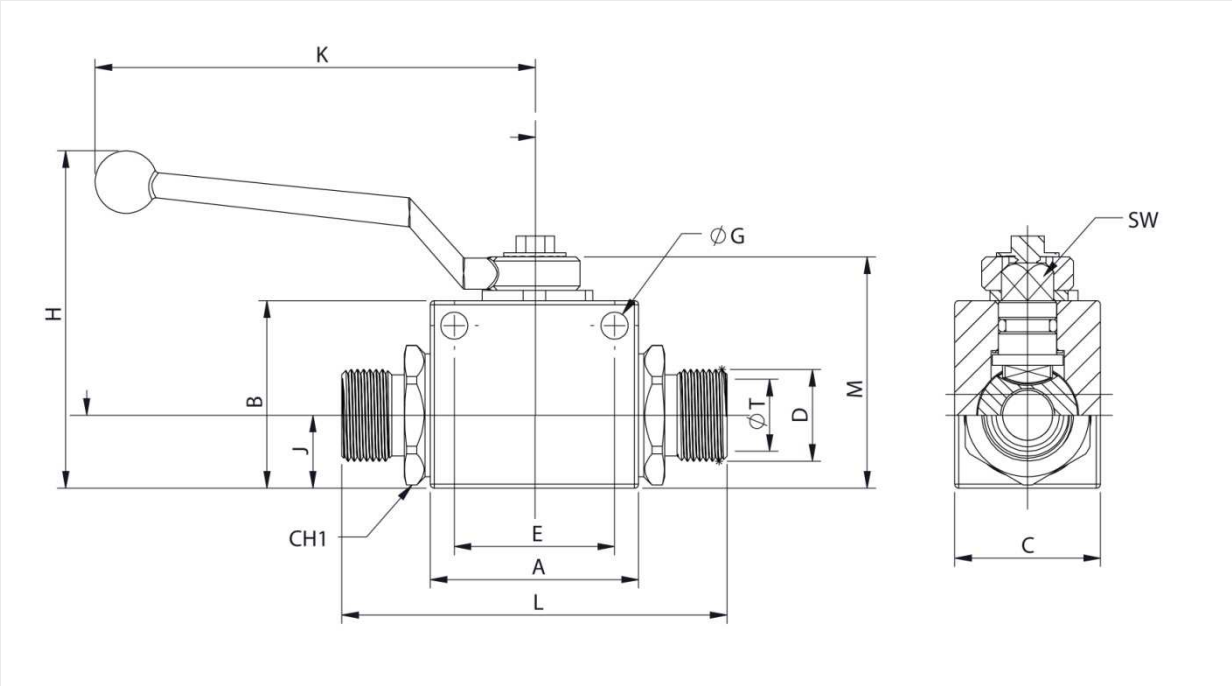

STANDARD MODELS

DN	D	ØT	With M.H.	Without M.H.		CH1	L	A	B	M	K	H	J	C	SW	Ø G	E
06	M12x1,5	6L	402.1111JB	402.1011JB	500Bar	22	78,60	40	35	45,50	105,50	71	13	26	8,90	4,50	31,50
	M14x1,5	8L	402.1111JC	402.1011JC			79,60										
	M16x1,5	8S	402.1111KD	402.1011KD													
	M18x1,5	10S	402.1111KE	402.1011KE													
10	M16x1,5	10L	402.1112JD	402.1012JD		27	77,40	45	35	50,50	105,50	76	16	32	8,90	5,20	31,50
	M18x1,5	12L	402.1112JE	402.1012JE			79,40										
	M22x1,5	15L	402.1112JG	402.1012JG													
	M20x1,5	12S	402.1112KF	402.1012KF													
	M22x1,5	14S	402.1112KG	402.1012KG													
13	M22x1,5	15L	402.1113JG	402.1013JG		30	92,50	50	45	55,50	105,50	81	17,50	35	8,90	6,50	38,50
	M26x1,5	18L	402.1113JI	402.1013JI													
	M24x1,5	16S	402.1113KH	402.1013KH													
	M30x2	20S	402.1113KJ	402.1013KJ													
20	M30x2	22L	402.1114JJ	402.1014JJ	400Bar	41	108,40	60	58	73	159,50	108	23	50	13,90	6,50	48,50
	M30x2	20S	402.1114KJ	402.1014KJ													
	M36x2	25S	402.1114KK	402.1014KK			114,40										
25	M36x2	28L	402.1115JK	402.1015JK	350Bar	46	113,50	65	65	80	159,50	115	27,50	57	13,90	8,50	50,50
	M42x2	30S	402.1115KL	402.1015KL			128,50										

412 SERIES
V2RD

BSP / NPTF / SAE / ORB
STAINLESS STEEL

Calibrated steel manufacturing.
Thread combination available upon request of minimum quantities.

• Materials

Carbon Steel *EN-10277-3,* Stainless Steel *AISI 316L,*

Stainless Steel *AISI 303*

Seals: NBR, Viton or EPDM

Seating Ball: P.O.M (Delrin®)

Handle: ZAMAK-5

• Applications: Designed for Oil hydraulic Applications according to European Directive 97.23.EC

• Equivalence

PISTER BKH
MHA BKH
HYDAC BKH
DMIC BVH

• Working temperature (Seals)

	NBR	Viton	EPDM
	+100ºC	+200ºC	+150ºC
	-30ºC	-10ºC	-40ºC

• Sectors: Industrial, Agricultural.

MODEL STRUCTURE

Example;

412.2014 GK

Series	Material	Mounting H.	O-Ring	Size	Thread
412.	**1** → Carbon ST **2** → AISI 316 **3** → AISI 303	**0** → No	**1** → NBR **2** → Viton **3** → EPDM		2 letters as per Table of Threads

		DN
1 →	¼"	06
2 →	⅜"	10
3 →	½"	13
4 →	¾"	20
5 →	1"	25
6 →	1 ¼"	32
7 →	1 ½"	40
8 →	2"	50

412 SERIES

V2RD

BSP / NPTF / SAE / ORB
STAINLESS STEEL

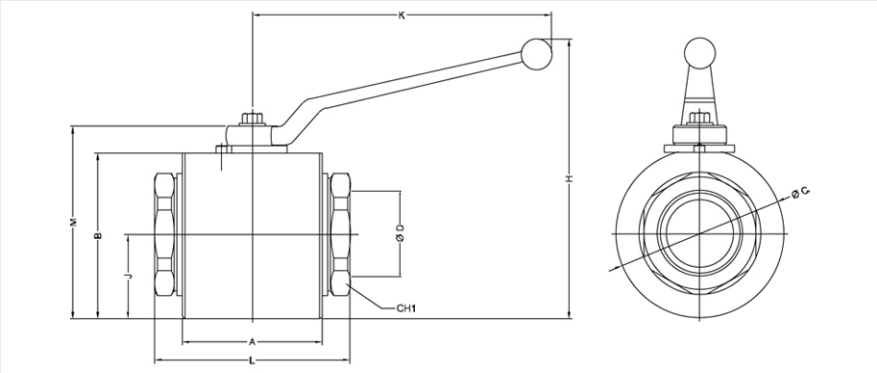

DN	CH1	L	A	M	K	H	J	B	ØC
06	22	74,50	40	45,50	105,50	71	13	35	38
10	27		45	50,50		76	16	40	45
13	30	84,50	50	55,50		81	17,50	45	48
20	41	93,40	60	73	159,50	108	50	59,5	65
25	46 50 55	114,50 136,50 146,50	65	80		115	27,50	65	70
32	55	110	80	100		135	41	85,75	90
40	65	120	85	114	214	176	44,50	105	110
50	80	140	100	129		191	52	115	120

STANDARD MODELS (*AISI 316*)

DN	Ø D	REF.	
06	¼" BSP	412.2021AB	500Bar
	¼" NPTF	412.2021.BB	
	7/16"-20ORB	412.2021GA	
10	⅜" BSP	412.2022AC	500Bar
	⅜" NPTF	412.2022BC	
	9/16"-18ORB	412.2022GC	
13	½" BSP	412.2023AD	500Bar
	½" NPTF	412.2023BD	
	¾" - 16ORB	412.2023GF	
20	¾" BSP	412.2024.AE	400Bar
	¾" NPTF	412.2024BE	
	1 1/16"-12ORB	412.2024GK	
25	1" BSP	412.2025AF	350Bar
	1" NPTF	412.2025BF	
	1 ¼" BSP	412.2025AG	
	1 ¼" NPTF	412.2025BG	
	1 ½" BSP	412.2025AH	
	1 ½" NPTF	412.2025BH	
	1 5/16"-12ORB	412.2025GO	
32	1 ¼" BSP	412.2026AG	320Bar
	1 ¼" NPTF	412.2026BG	
	1 5/8"-12ORB	412.2026GT	
40	1 ½" BSP	412.2027AH	320Bar
	1 ½" NPTF	412.2027BH	
50	2" BSP	412.2028AI	320Bar
	2" NPTF	412.2028BI	

Safety pressure factor 1:4

STANDARD MODELS (*AISI 316*)

DN	D	ØT	REF.	
06	M12x1,5	6L	412.2021JB	500Bar
	M14x1,5	8L	412.2021JC	
	M16x1,5	8S	412.2021KD	
	M18x1,5	10S	412.2021KE	
10	M16x1,5	10L	412.2022JD	500Bar
	M18x1,5	12L	412.2022JE	
	M22x1,5	15L	412.2022JG	
	M20x1,5	12S	412.2022KF	
	M22x1,5	14S	412.2022KG	
13	M22x1,5	15L	412.2023JG	500Bar
	M26x1,5	18L	412.2023JI	
	M24x1,5	16S	412.2023KH	
	M30x2	20S	412.2023KJ	
20	M30x2	22L	412.2024JJ	400Bar
	M30x2	20S	412.2024KJ	
	M36x2	25S	412.2024KK	
25	M36x2	28L	412.2025JK	350Bar
	M42x2	30S	412.2025KL	
32	M45x2	35L	412.2026JM	320Bar
	M52x2	38S	412.2026KN	

412 SERIES

V2RD

BSP / NPTF / SAE / ORB
CARBON STEEL

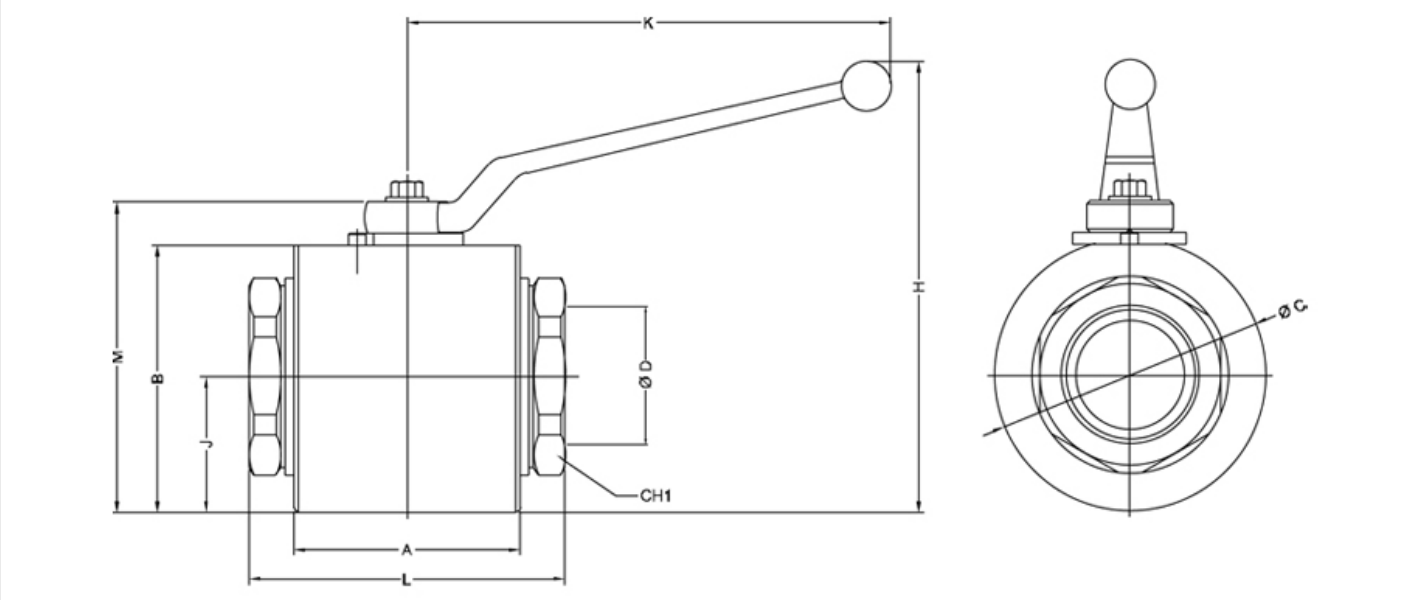

DN	CH1	L	A	M	K	H	J	B	ØC
32	55	110	80	100	159,50	135	41	85,75	90
40	65	120	85	114	214	176	44,50	105	110
50	80	140	100	129		191	52	115	120

STANDARD MODELS (CARBON STEEL)

DN	D	ØT	REF.	
32	M45x2	35L	412.1016JM	320Bar
	M52x2	38S	412.1016KN	

STANDARD MODELS (CARBON STEEL)

DN	Ø D	REF.	
32	1 ¼” BSP	412.1016AG	320Bar
	1 ¼” NPTF	412.1016BG	
	1 5/8”-12ORB	412.1016GT	
40	1 ½” BSP	412.1017AH	320Bar
	1 ½” NPTF	412.1017BH	
50	2” BSP	412.1018AI	320Bar
	2” NPTF	412.1018BI	

432 SERIES

V3RH

BSP / NPTF
ORB/ SAE

Calibrated steel manufacturing.
Available with or without mounting holes.
Thread combination available upon request of minimum quantities.

• Materials

Carbon Steel *EN-10277-3*

Seals: NBR, Viton or EPDM

Seating Ball: P.O.M (Delrin®)

Handle: ZAMAK-5

• Applications:

Designed for Oil hydraulic Applications according to European Directive 97.23.EC
Special for American market

• Equivalence

PISTER BK3
MHA BK3
HYDAC KHB3K

• Working temperature (Seals)

	NBR	Viton	EPDM
	+100ºC	+200ºC	+150ºC
	-30ºC	-10ºC	-40ºC

• Sectors:

Industrial, Agricultural.

MODEL STRUCTURE

Example;

432.1113 AD

Series	Material	Mounting H.	O-Ring	Size		DN	Thread
432. (**L** Ball) or *433.* (**T** Ball)	**1** → Carbon ST	**0** → No **1** → Yes	**1** → NBR **2** → Viton **3** → EPDM	**1** → ¼"		06	2 letters as per Table of Threads
				2 → ⅜"		10	
				3 → ½"		13	
				4 → ¾"		20	
				5 → 1"		25	

432 SERIES

V3RH

BSP / NPTF
ORB/ SAE

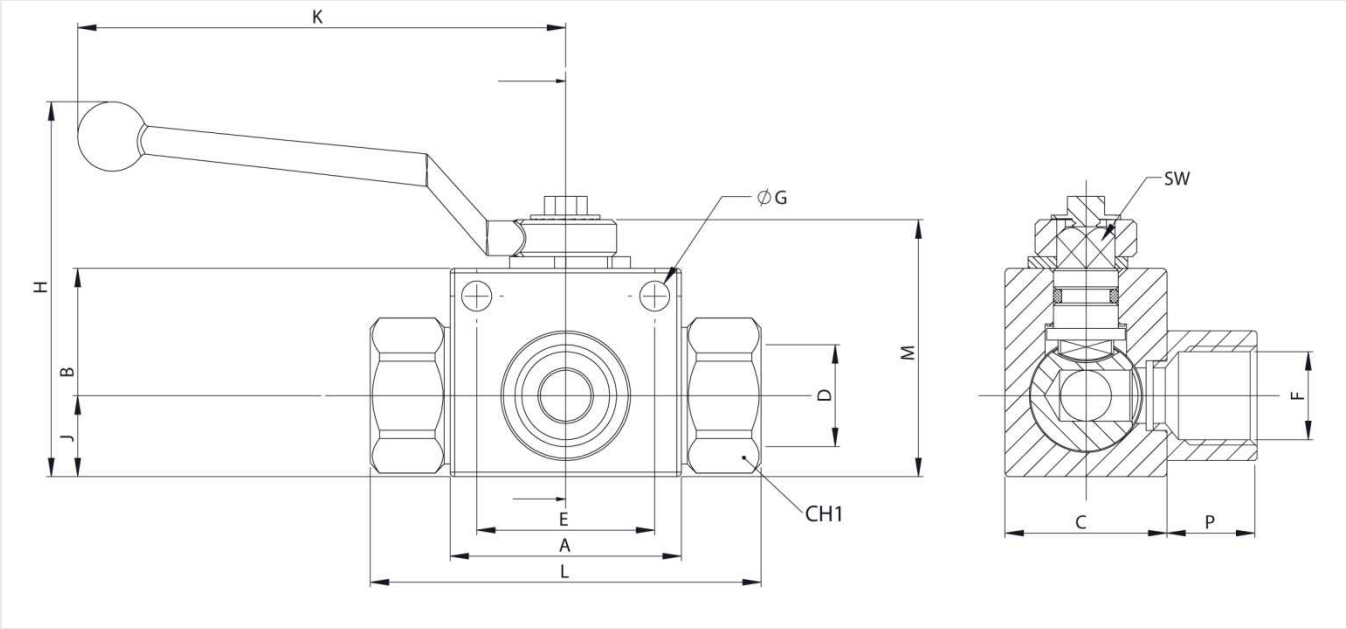

(A dimension)

STANDARD MODELS

DN	D / F	With M.H.	Without M.H.		CH1	L	A	B	M	K	H	J	C	SW	Ø G	E	P
06	¼" BSP	432.1111AB	432.1011AB	500Bar	22	72,60	40	35	45,50	105,50	71	13	26	8,90	4,50	31,50	13
	¼" NPTF	432.1111BB	432.1011BB														14
	7/16"-20ORB	432.1111GA	432.1011GA														
10	⅜" BSP	432.1112AC	432.1012AC		27	75,40	45	40	50,50	105,50	76	16	32	8,90	5,20	31,50	15
	⅜" NPTF	432.1112BC	432.1012BC														16
	9/16" ORB	432.1112GC	432.1012GC														
13	½" BSP	432.1113AD	432.1013AD		30	84,50	50	45	55,50	105,50	81	17,50	35	8,90	6,50	38,50	19,50
	½" NPTF	432.1113BD	432.1013BD														
	¾" - 16ORB	432.1113GF	432.1013GF														
20	¾" BSP	432.1114AE	432.1014AE	400Bar	41	93,40	60	60	73	159,50	108	23	50	13,90	6,50	48,50	19
	¾" NPTF	432.1114BE	432.1014BE														21
	1 1/16"-12ORB	432.1114GK	432.1014GK														
25	1" BSP	432.1115AF	432.1015AF	350Bar	46	114,50	65	65	80	159,50	115	27,50	57	13,90	8,50	50,50	25
	1" NPTF	432.1115BF	432.1015BF		46	114,50											25
	1 ¼" BSP	432.1115AG	432.1015AG		50	136,50											31
	1 ¼" NPTF	432.1115BG	432.1015BG		50	136,50											25
	1 ½" BSP	432.1115AH	432.1015AH		55	146,50											32
	1 ½" NPTF	432.1115BH	432.1015BH		55	146,50											25
	1 5/16" -12ORB	432.1115GO	432.1015GO		46	114,50											25

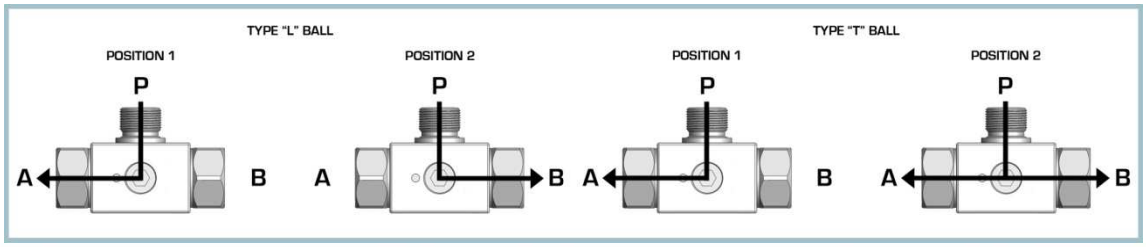

432 SERIES
V3MT DIN 2353

Calibrated steel manufacturing.
Available with or without mounting holes.
Thread combination available upon request of minimum quantities.

• Materials

Carbon Steel *EN-10277-3*

Seals: NBR, Viton or EPDM

Seating Ball: P.O.M (Delrin®)

Handle: ZAMAK-5

• Applications:

Designed for Oil hydraulic Applications according to European Directive 97.23.EC
Special for American market

• Equivalence

PISTER BK3
MHA BK3
HYDAC KHB3k

• Working temperature (Seals)

	NBR	Viton	EPDM
	+100ºC	+200ºC	+150ºC
	-30ºC	-10ºC	-40ºC

• Sectors: Industrial, Agricultural.

MODEL STRUCTURE

Example;

432.1013 KD

Series	Material	Mounting H.	O-Ring	Size		DN	Thread
432. (**L** Ball) or *434.* (**T** Ball) .	**1** → Carbon ST	**0** → No **1** → Yes	**1** → NBR **2** → Viton **3** → EPDM	**1** → ¼” **2** → ⅜” **3** → ½” **4** → ¾” **5** → 1”		06 10 13 20 25	2 letters as per Table of Threads

432 SERIES
V3MT DIN 2353

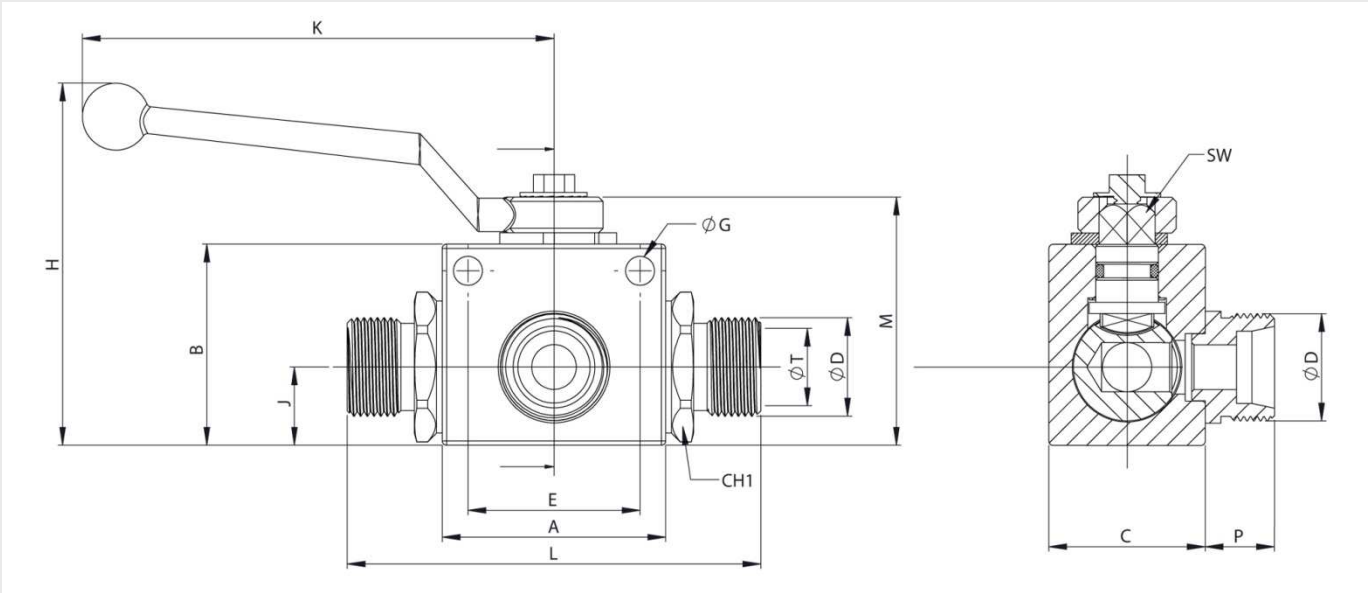

(A dimension)

STANDARD MODELS

DN	D	ØT	With M.H.	Without M.H.		CH1	L	A	B	M	K	H	J	C	SW	Ø G	E	P
06	M12x1,5	6L	432.1111JB	432.1011JB	500Bar	22	78,60	40	35	45,50	105,50	71	13	26	8,90	4,50	31,50	13
	M14x1,5	8L	432.1111JC	432.1011JC			79,60											
	M16x1,5	10L	432.1111JD	432.1011JD			78,60											
	M16x1,5	8S	432.1111KD	432.1011KD			79,60											14
	M18x1,5	10S	432.1111KE	432.1011KE			79,60											
10	M16x1,5	10L	432.1112JD	432.1012JD		27	77,40	45	40	50,50	105,50	76	16	32	8,90	5,20	31,50	14
	M18x1,5	12L	432.1112JE	432.1012JE			79,40											15
	M22x1,5	15L	432.1112JG	432.1012JG														
	M20x1,5	12S	432.1112KF	432.1012KF														
	M22x1,5	14S	432.1112KG	432.1012KG														24
13	M22x1,5	15L	432.1113JG	432.1013JG		30	92,50	50	45	55,50	105,50	81	17,50	35	8,90	6,50	38,50	15,50
	M26x1,5	18L	432.1113JI	432.1013JI														
	M24x1,5	16S	432.1113KH	432.1013KH														
	M30x2	20S	432.1113KJ	432.1013KJ			98,50											
20	M30x2	22L	432.1114JJ	432.1014JJ	400Bar	41	108,40	60	58	73	159,50	108	23	50	13,90	6,50	48,50	17
	M30x2	20S	432.1114KJ	432.1014KJ			114,40											
	M36x2	25S	432.1114KK	432.1014KK			114,40											
25	M36x2	28L	432.1115JK	432.1015JK	350Bar	46	128,50	65	65	80	159,50	115	27,50	57	13,90	8,50	50,50	25
	M42x2	30S	432.1115KL	432.1015KL														

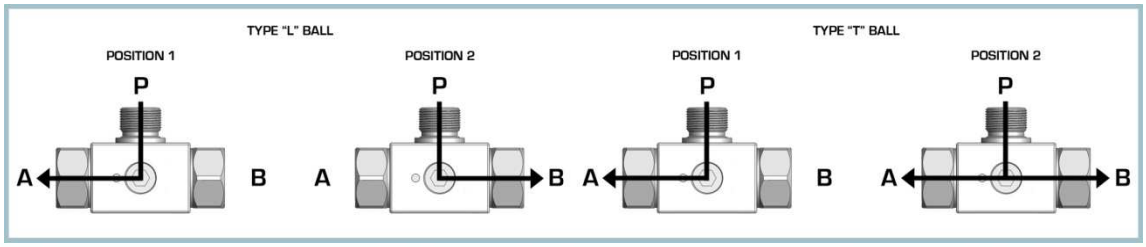

433 SERIES
V3RH BSP F-M-F

Calibrated steel manufacturing.
Available with or without mounting holes.
Thread combination available upon request of minimum quantities.

• Materials

Carbon Steel *EN-10277-3*

Seals: NBR, Viton or EPDM

Seating Ball: P.O.M (Delrin®)

Handle: ZAMAK-5

• Applications:

Designed for Oil hydraulic Applications according to European Directive 97.23.EC
Special for American market

• Working temperature (Seals)

	NBR	Viton	EPDM
	+100ºC	+200ºC	+150ºC
	-30ºC	-10ºC	-40ºC

• Sectors: Industrial, Agricultural.

MODEL STRUCTURE

Example;

433.1115 AG

Series	Material	Mounting H.	O-Ring	Size		DN	Thread
433. (**L** Ball) or *433.* (**T** Ball)	**1** → Carbon ST	**0** → No **1** → Yes	**1** → NBR **2** → Viton **3** → EPDM	**1** → ¼"		06	2 letters as per Table of Threads
				2 → ⅜"		10	
				3 → ½"		13	
				4 → ¾"		20	
				5 → 1"		25	

433 SERIES
V3RH BSP F-M-F

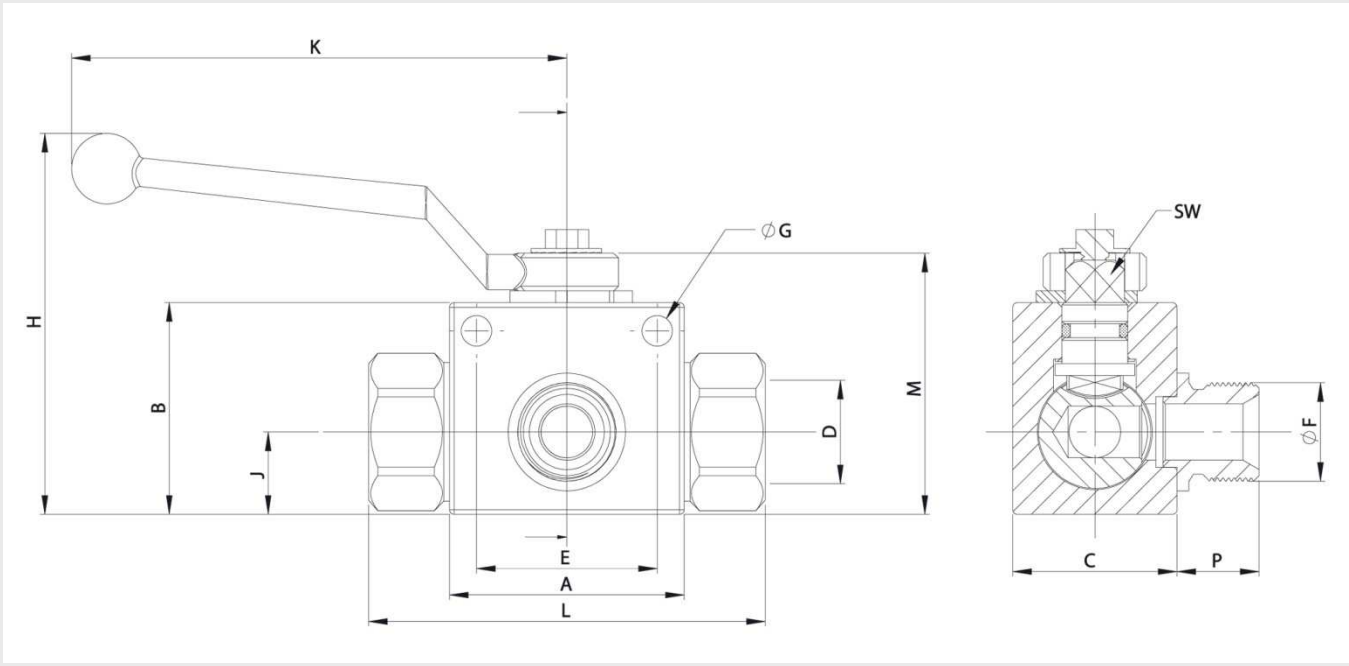

(A dimension)

STANDARD MODELS																		
DN	D / F	With M.H.	Without M.H.		CH1	L	A	B	M	K	H	J	C	SW	G	E	P
06	¼" BSP	433.1111AB	433.1011AB		22	72,60	40	35	45,50	105,50	71	13	26	8,90	4,50	31,50	13
10	⅜" BSP	433.1112AC	433.1012AC	500Bar	27	75,40	45	40	50,50	105,50	76	16	32	8,90	5,20	31,50	15
13	½" BSP	433.1113AB	433.1013AB		30	84.50	50	45	55,50	105,50	81	17,50	35	8,90	6,50	38,50	17,50
20	¾" BSP	433.1114AE	433.1014AE	400Bar	41	93.40	60	60	73	159,50	108	23	50	13,90	6,50	48,50	19
	1" BSP	433.1115AF	433.1015AF		46	114,50											25
25	1 ¼" BSP	433.1115AG	433.1015AG	350Bar	50	136,50	65	65	80	159,50	115	27,50	57	13,90	8,50	50,50	28
	1 ½" BSP	433.1115AH	433.1015AH		55	146,50											

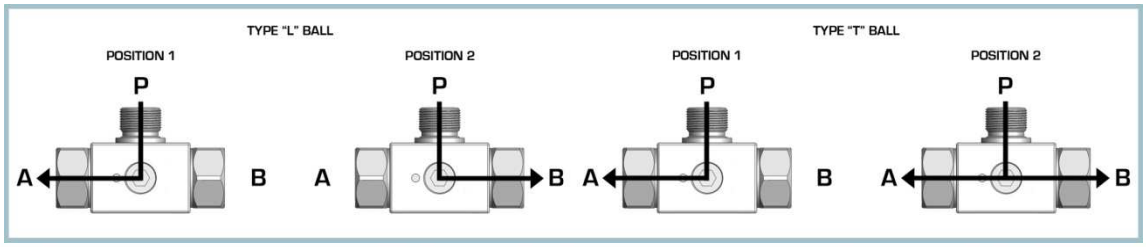

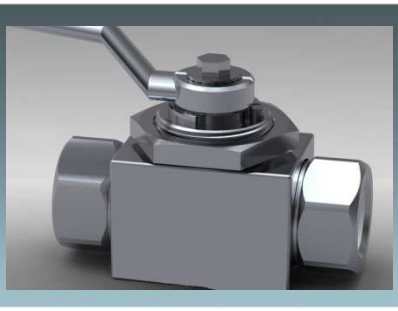

452 SERIES

V2CR

BSP / NPTF SAE / ORB DIN2353

Calibrated steel manufacturing.
With bulkhead thread and nut to assembly in panels
Thread combination available upon request of minimum quantities.

• Materials

Carbon Steel *EN-10277-3*

Seals: NBR, Viton or EPDM

Seating Ball: P.O.M (Delrin®)

Handle: ZAMAK-5

• Applications:

Designed for Oil hydraulic Applications according to European Directive 97.23.EC
Special for American market

• Equivalence

INTEVA STANDARD

• Working temperature (Seals)

	NBR	Viton	EPDM
	+100ºC	+200ºC	+150ºC
	-30ºC	-10ºC	-40ºC

• Sectors:

Industrial, Agricultural.

MODEL STRUCTURE

Example;

452.1112 AC

Series	Material	Mounting H.	O-Ring	Size	Thread
452.	**1** → Carbon ST	**0** → No **1** → Yes	**1** → NBR **2** → Viton **3** → EPDM		2 letters as per Table of Threads

	DN
1 → ¼"	06
2 → ⅜"	10
3 → ½"	13
4 → ¾"	20
5 → 1"	25

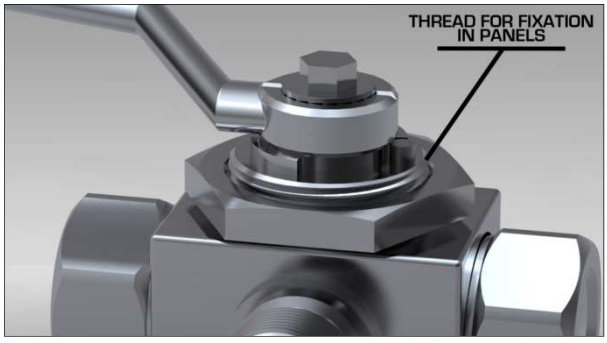

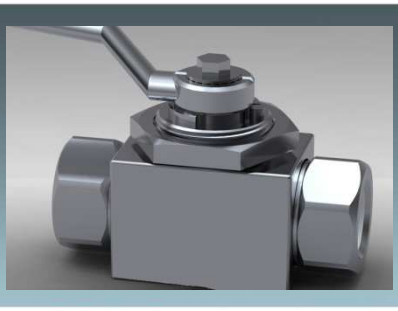

452 SERIES

V2CR

BSP / NPTF SAE / ORB DIN2353

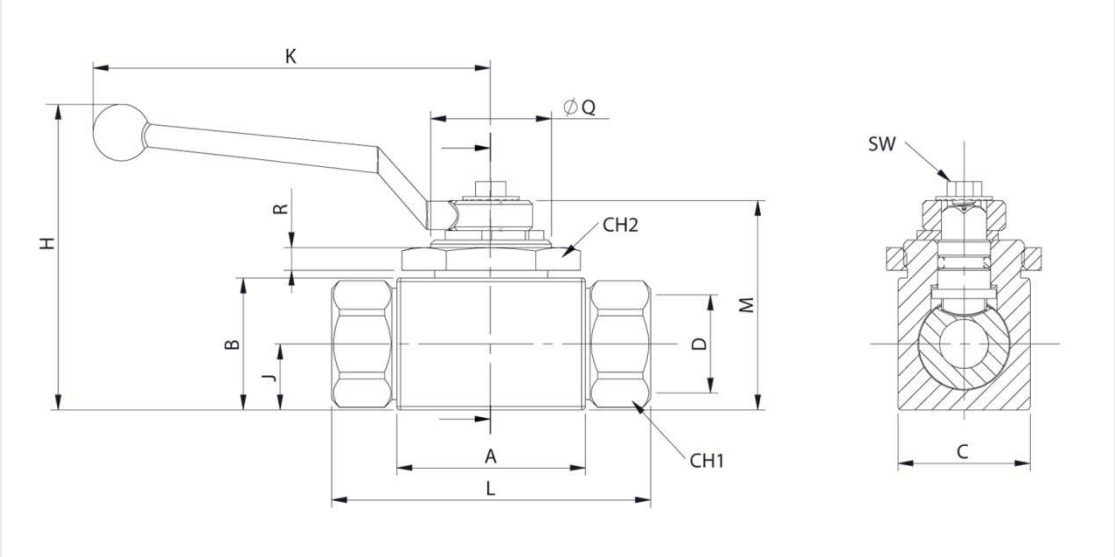

STANDARD MODELS

DN	D	REF.		CH1	CH2	L	A	B	M	K	H	J	C	SW	R	Ø Q
06	¼" BSP	452.1011AB	500Bar	22	30	72,60	40	35	45,50	105,50	71	13	26	8,90	6	M32x1,5
	¼" NPTF	452.1011BB														
	7/16" -12ORB	452.1011GA														
	M12x1,5 6L	452.1011JB				78,60										
	M14x1,5 8L	452.1011JC														
	M16x1,5 10L	452.1011JD				79,60										
	M16x1,5 8S	452.1011KD														
10	⅜" BSP	452.1012AC		27	41	75,40	45	40	50,50	105,50	76	16	32	8,90	6	M32x1,5
	⅜" NPTF	452.1012BC														
	9/16" -18ORB	452.1012GC														
	M16x1,5 10L	452.1012JD				77,40										
	M18x1,5 12L	452.1012JE														
	M22x1,5 15L	452.1012JG				79,40										
	M20x1,5 12S	452.1012KF														
	M22x1,5 14S	452.1012KG														
13	½" BSP	452.1013AD		30	41	84,50	50	45	55,50	105,50	81	17,50	35	8,90	6	M32x1,5
	½" NPTF	452.1013BD														
	¾" -16ORB	452.1013GF														
	M22x1,5 15L	452.1013JG														
	M26x1,5 18L	452.1013JI				92,50										
	M24x1,5 16S	452.1013KH														
	M30x2 20S	452.1013KJ														
20	¾" BSP	452.1014AE	400Bar	41	50	93,40	60	58	73	159,50	108	23	50	13,90	6	M45x1,5
	¾" NPTF	452.1014BE														
	1 1/16"-12ORB	452.1014GK														
	M30x2 22L	452.1014JJ				108,40										
	M30x2 20S	452.1014KJ														
	M36x2 25S	452.1014KK				114,40										
25	1" BSP	452.1015AF	350Bar	46	50	114,50	65	65	80	159,50	115	27,50	57	13,90	6	M45x1,5
	1" NPTF	452.1015BF														
	1 2/16" -12ORB	452.1015GO														
	M36x2 28L	452.1015JK				113,50										

453 SERIES
V3CR BSP F-M-F

Calibrated steel manufacturing.
Available with and without mounting holes.
Thread combination available upon request of minimum quantities.

• Materials

Carbon Steel *EN-10277-3*

Seals: NBR, Viton or EPDM

Seating Ball: P.O.M (Delrin®)

Handle: ZAMAK-5

• Applications:

Designed for Oil hydraulic Applications according to European Directive 97.23.EC
Special for American market

• Working temperature (Seals)

	NBR	Viton	EPDM
	+100ºC	+200ºC	+150ºC
	-30ºC	-10ºC	-40ºC

• Sectors: Industrial, Agricultural.

MODEL STRUCTURE

Example;

453.1014 AE

Series	Material	Mounting H.	O-Ring	Size	Thread
453. (**L** Ball) or *455.* (**T** Ball)	**1** → Carbon ST	**0** → No **1** → Yes	**1** → NBR **2** → Viton **3** → EPDM		2 letters as per Table of Threads

	DN
1 → ¼"	06
2 → ⅜"	10
3 → ½"	13
4 → ¾"	20
5 → 1"	25

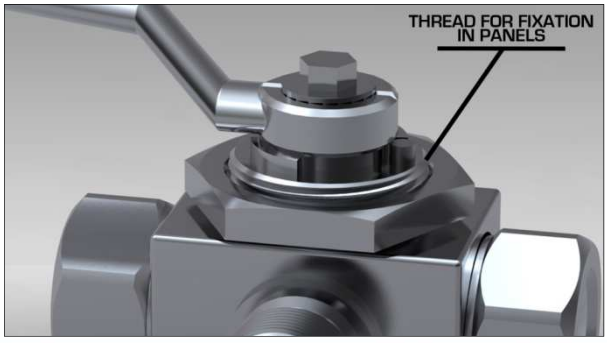

453 SERIES
V3CR BSP F-M-F

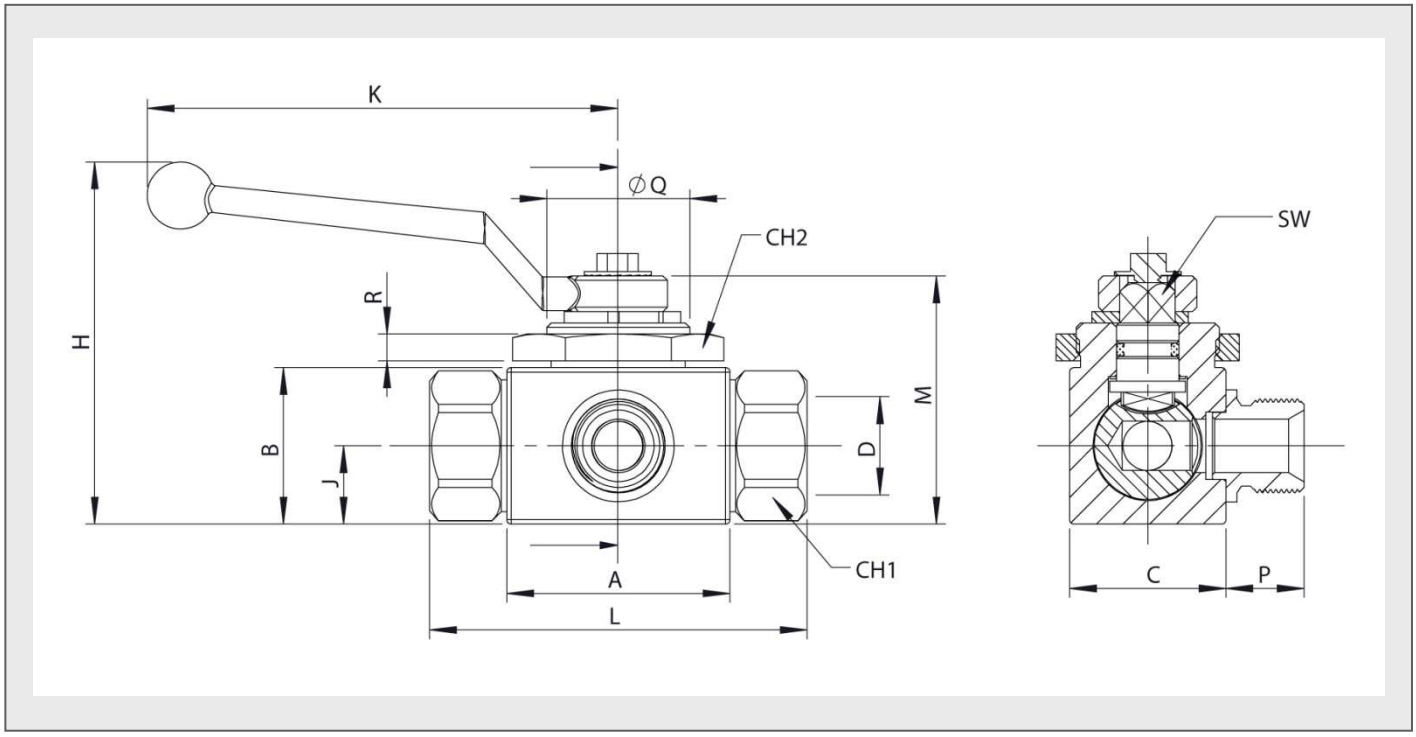

STANDARD MODELS																	
DN	D	REF.		CH1	CH 2	L	A	B	M	K	H	J	C	SW	R	Q	P
06	¼" BSP	453.1011AB		22	30	72,60	40	35	45,50		71	13	26			M32x1,5	13
10	⅜" BSP	453.1012AC	500Bar	27	41	75,40	45	40	50,50	105,50	76	16	32	8,90		M32x1,5	15
13	½" BSP	453.1013AD		30		84,50	50	45	55,50		81	17,50	35		6		17,5
20	¾" BSP	453.1014AE	400Bar	41	50	93,40	60	58	73	159,50	108	23	50	13,90		M45x1,5	19
25	1" BSP	453.1015AF	350Bar	46	50	114,50	65	65	80		115	27,50	57				25

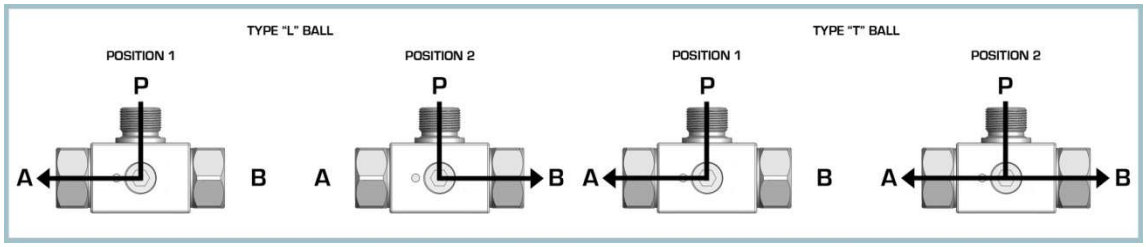

470 SERIES
EK2

BSP
DIN2353

Calibrated steel manufacturing.
Thread combination available upon request of minimum quantities.

• Materials

Carbon Steel *EN-10277-3*

Seals: NBR, Viton or EPDM

Handle: ZAMAK-5

• Working temperature (Seals)

	NBR	Viton	EPDM
	+100ºC	+200ºC	+150ºC
	-30ºC	-10ºC	-40ºC

• Applications:

Designed for Oil hydraulic Applications according to European Directive 97.23.EC
Special for American market

• Sectors: Industrial, Agricultural.

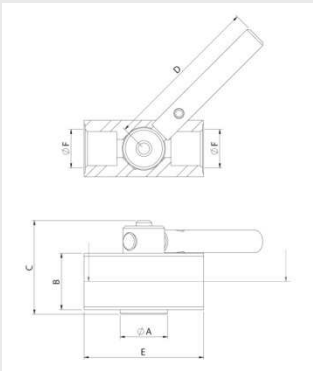

STANDARD MODEL

DN	Ø F	REF.		Ø A	B	C	D	E
10	⅜" BSP	470.1012AC	250Bar	36	56	26,85	112	53

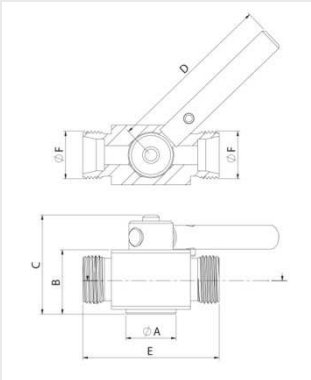

STANDARD MODEL

DN	Ø F	REF.		Ø A	B	C	D	E
10	M20x1,5	470.1012KFA	250Bar	36	56	26,85	112	53

471 SERIES
EK3

BSP

Steel manufacturing.
Designed without inner ball. Spin movement allows opening and closing the valve.
BSP Threads, others available upon request.

• Materials

Carbon Steel *EN-10277-3*

Seals: NBR, Viton or EPDM

Handle: ZAMAK-5

• Working temperature (Seals)

	NBR	Viton	EPDM
	+100ºC	+200ºC	+150ºC
	-30ºC	-10ºC	-40ºC

• Applications:

Designed for Oil hydraulic Applications according to European Directive 97.23.EC
Special for American market

• Sectors: Industrial, Agricultural.

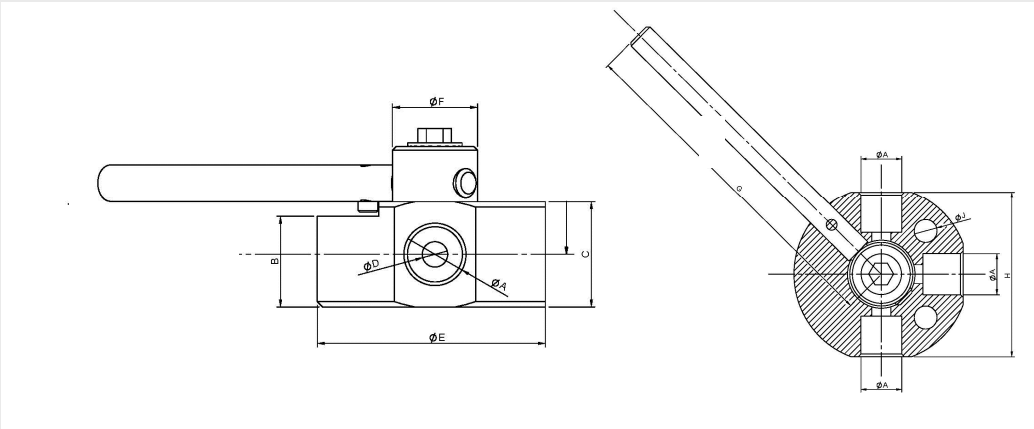

STANDARD MODEL

DN	F	REF.		Ø A	B	C	Ø D	Ø E	Ø F	G	H	I	Ø J
10	⅜" BSP	471.1112AC	190Bar	15,20	25	29	7	65	26,50	127,25	61	15,50	8,50

472 SERIES
VPN

BSP

Aluminium manufacturing.
Designed for pneumatic systems in trucks.
BSP Threads, others upon request.

• Materials

Body: *Aluminium*

Inner parts: *Carbon Steel EN 10277-3*

Seals: *NBR*

Handle: *Carbon Steel EN 10277-3*

• Applications: Designed for Pneumatic Systems. Applications according to European Directive 97.23.EC

• Working temperature (Seals)

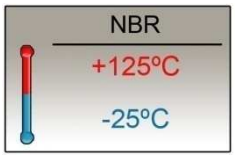

• Sectors: Trucks

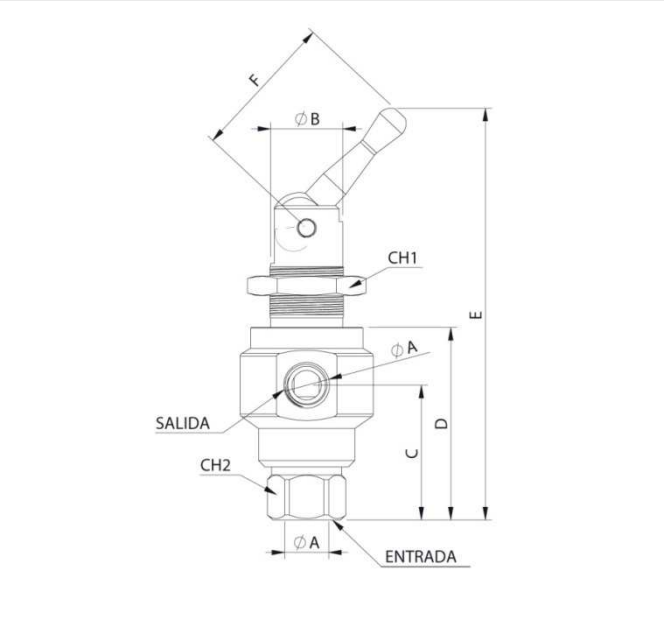

STANDARD MODEL

DN	Ø A	REF.		Ø B	C	D	E	F	CH2	CH1
06	¼" BSP	472.611AB	15Bar	25	43	60,50	125	46	22	32

502 SERIES
VPC

BSP

Designed to act in case of hose breakage.
Block/Control charge's descent avoiding a sharp-fall pressure on the circuit.
BSP Threads, others available upon request.

• Materials

Carbon Steel EN -10277-3 / AISI 316L
Springs: *Carbon Steel DIN 17233/84(B)*

• Sectors: Industrial

• Applications:

Designed for Oil hydraulic Applications according to European Directive 97.23.EC
Special for American market

MODEL STRUCTURE

Example;

502.19992AN

Series	Material	Regulation	Size		Thread
502. or 503.	**1** → Carbon St. **2** → AISI 316	**999** → Random **150** → 1,5±0,1mm **250** → 2,5±0,1mm **350** → 3,5±0,1mm **450** → 4,5±0,1mm		DN	2 letters as per Table of Threads
			1 → ¼"	06	
			2 → ⅜"	10	
			3 → ½"	13	
			4 → ¾"	20	
			5 → 1"	25	

• Random regulation for VPC (999) although it is possible to regulate them upon request.

502 SERIES
VPC

BSP

OPERATION:

In normal position the disc is driven by the spring allowing fluid passage from Z to Z1.
In normal conditions, the fluid returns also free to tank from Z1 to Z.
When the fluid passage increases from Z1 to Z, and the reaction flow exceeds, the disc blocks the return to tank, preventing uncontrolled descent.
The user can adjust the reaction flow (T), according to specific needs of this safety valve.

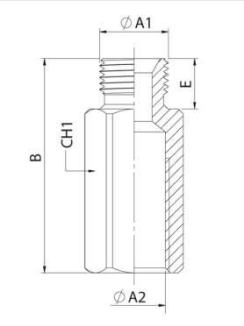

BODY M - F

DN	ØA1	ØA2	REF.	CH1	B	E	
06	¼" BSP M.	¼" BSP	502.19991AM	19	50	12	
10	⅜" BSP M.	⅜" BSP	502.19992AN	22	59	13	
13	½" BSP M.	½" BSP	502.19993AO	27	65	15	350Bar
20	¾" BSP M.	¾" BSP	502.19994AP	36	78	16	
25	1" BSP M.	1" BSP	502.19995AQ	41	92	18	

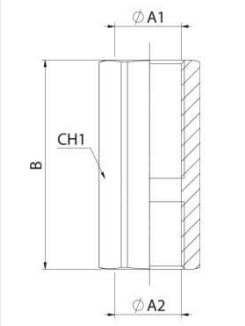

BODY F - F

DN	ØA1	ØA2	REF.	CH1	B	
06	¼" BSP	¼" BSP	502.19991AB	19	48	
10	⅜" BSP	⅜" BSP	502.19992AC	22	59	
13	½" BSP	½" BSP	502.19993AD	27	62	350Bar
20	¾" BSP	¾" BSP	502.19994AE	36	72	
25	1" BSP	1" BSP	502.19995AF	41	86	

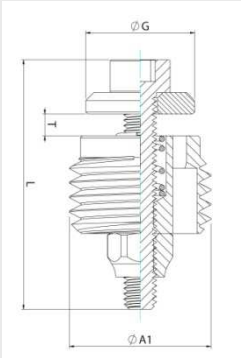

CARTRIDGE

DN	ØA1	REF.	ØG	L	
06	¼" BSP	503.19991AM	10	23	
10	⅜" BSP	503.19992AN	13.80	23	
13	½" BSP	503.19993AO	16	34	350Bar
20	¾" BSP	503.19994AP	20	34	
25	1" BSP	503.19995AQ	24	43	

SPECIAL OPTIONS:

A hole for despressurization on the VPC valve can be delivered for minimum quantities upon request.
Adding a three number code at the end of the reference depending on the diameter of the hole.
Examples:
Ø6 mm → 060
Ø10 mm → 100

502 SERIES
VPC

BSP

REACTION FLOW

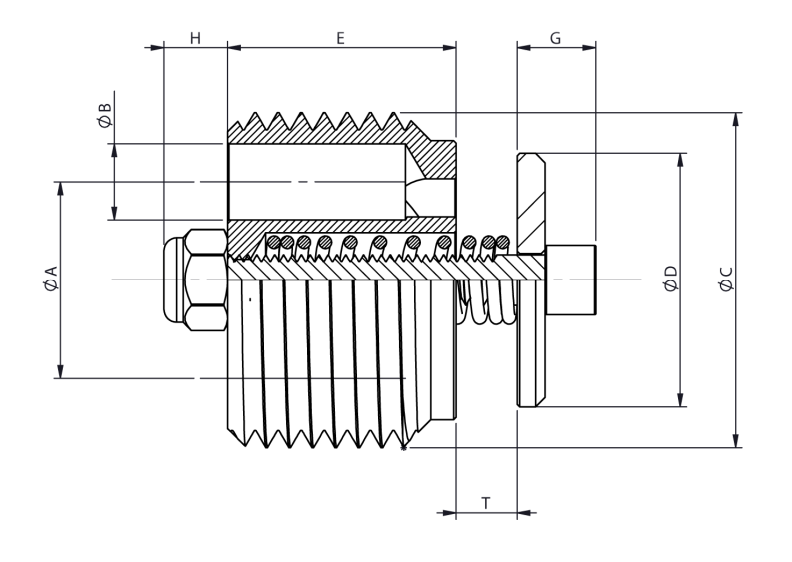

DN	Max. Flow Rate	Max. Pressure	A mm	B mm	C BSP	D mm	E mm	T mm	G mm	H mm
06	25 LPM	350 BAR	8.2	2.25	1/4''	10	9	See diagram below	5	4
10	50 LPM	350 BAR	11	3	3/8''	13.8	11		5	4
13	80 LPM	350 BAR	12	4.5	1/2''	16	13		5	5
20	150 LPM	350 BAR	15.5	6	3/4''	20	18		6.2	5
25	200 LPM	350 BAR	20	7	1''	24	21		7.5	5

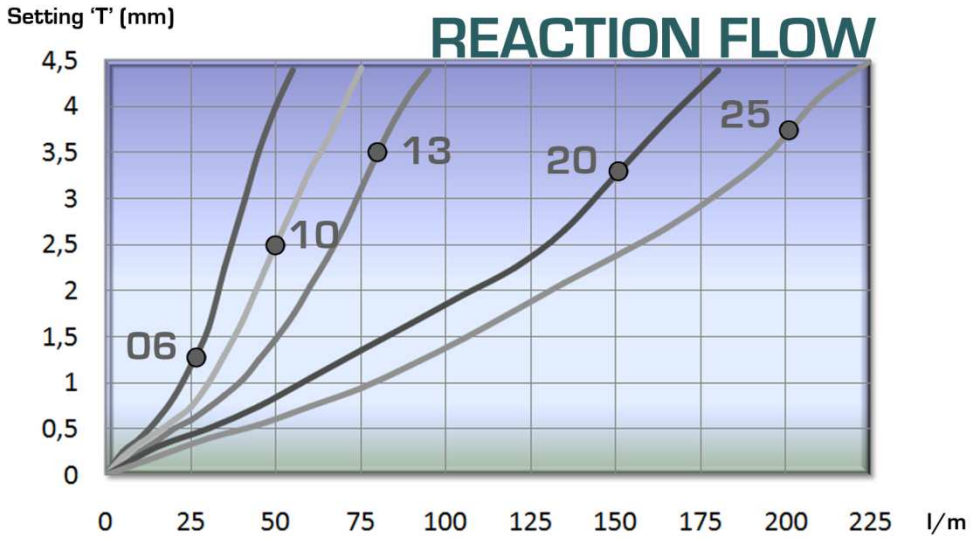

• Random regulation for VPC (999) although it is possible to regulate them upon request.

504 SERIES
ATR

CARBON STEEL / AISI 316
BSP / NPTF

Designed to avoid returns of the fluid inside the hydraulic circuit.
Metal closing system (without o-ring)
High pressure peak resistance.
Standard opening pressure 5psi. Special opening pressures avaible upon request.

• Materials

	CARBON STEEL	STAINLESS STEEL
Body	*Carbon Steel EN-10277-3*	*AISI 316L*
Seals	*NBR, Viton or EPDM*	*NBR, Viton or EPDM*
Springs	*Carbon Steel DIN 17233/84(B)*	*AISI302 DIN 17224*

• Working temperature (Seals)

NBR	Viton	EPDM
+100ºC	+200ºC	+150ºC
-30ºC	-10ºC	-40ºC

• Sectors

Carbon Steel → Agricultural, Industrial.

Stainless Steel → Chemical, Industrial, Offshore.

• Applications:

Designed for Oil hydraulic Applications according to European Directive 97.23.EC
Special for American market

• Equivalence:

GROMELLE 4000
DMIC CVH
PARKER DC
SNAP TITE CPIFF

MODEL STRUCTURE

Example;

504. 110006 AG

Series	Material	Closing	O-ring	Opening pressure	Size	Thread
504.	**1** → Carbon St **2** → AISI 316	**1** → Poppet V.	**0** → Without **1** → NBR 90Sh **2** → Viton **3** → EPDM	**00** → 0,34Bar/5psi ±0,3 **10**→ 1Bar/ 14psi ±0,3 **25** → 2,5Bar/ 36psi ±0,3 **45** → 4,5Bar/ 65psi ±0,3 **60** → 6Bar/ 87psi ±0,3 **80** → 8Bar/ 115psi ±0,3 **99** → 10Bar/ 145psi ±0,3		2 letter as per Table of threads

	DN
0 → ⅛"	04
1 → ¼"	06
2 → ⅜"	10
3 → ½"	13
4 → ¾"	20
5 → 1"	25
6 →1 ¼"	32
7 →1 ½"	40
8 → 2"	50

504 SERIES
ATR

CARBON STEEL / AISI 316
BSP / NPTF

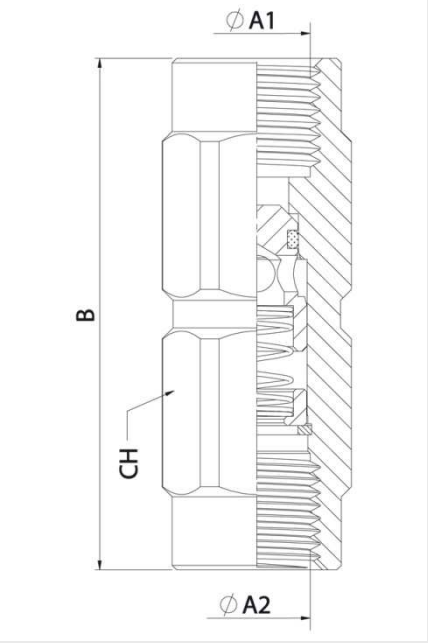

STANDARD *CARBON STEEL* MODELS

DN	ØA1/ ØA2	REF.		CH	B
04	⅛" BSP	504.110000AA	300Bar	14	44
	⅛" NPTF	504.110000BA			
06	¼" BSP	504.110001AB		19	56
	¼" NPTF	504.110001BB			
10	⅜" BSP	504.110002AC		22	70
	⅜" NPTF	504.110002BC			
13	½" BSP	504.110003AD		30	77
	½" NPTF	504.110003BD			
20	¾" BSP	504.110004AE		36	90
	¾" NPTF	504.110004BE			
25	1" BSP	504.110005AF		46	106
	1" NPTF	504.110005BF			
32	1 ¼" BSP	504.110006AG		55	125
	1 ¼" NPTF	504.110006BG			
40	1 ½" BSP	504.110007AH		60	140
	1 ½" NPTF	504.110007BH			
50	2" BSP	504.110008AI	200Bar	75	160
	2" NPTF	504.110008BI			

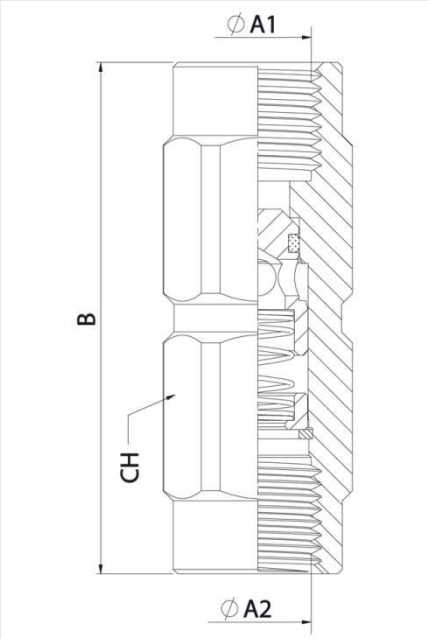

STANDARD *STAINLESS STEEL* MODELS

DN	ØA1/ ØA2	REF.		CH	B
04	⅛" BSP	504.210000AA	300Bar	14	44
	⅛" NPTF	504.210000BA			
06	¼" BSP	504.210001AB		19	56
	¼" NPTF	504.210001BB			
10	⅜" BSP	504.210002AC		22	70
	⅜" NPTF	504.210002BC			
13	½" BSP	504.210003AD		30	77
	½" NPTF	504.210003BD			
20	¾" BSP	504.210004AE		36	90
	¾" NPTF	504.210004BE			
25	1" BSP	504.210005AF		46	106
	1" NPTF	504.210005BF			
32	1 ¼" BSP	504.210006AG		55	125
	1 ¼" NPTF	504.210006BG			
40	1 ½" BSP	504.210007AH		60	140
	1 ½" NPTF	504.210007BH			
50	2" BSP	504.210008AI	200Bar	75	160
	2" NPTF	504.210008BI			

✶SPECIAL OPTIONS:
ATR Check Valves that require special opening pressures can be delivered upon request by minimum quantities.

504 SERIES
ATR

CARBON STEEL / AISI 316
BSP / NPTF

TECHNICAL DATA

DN	Max. Rated Flow	Working Pressure	Max. Working Pressure*
	l/m / GPM	bar / psi	bar / psi
04	8 / 2,11	300 / 4350	1200 / 17400
06	26 / 6,87	300 / 4350	1200 / 17400
10	44 / 11,6	300 / 4350	1200 / 17400
13	90 / 23,85	300 / 4350	1200 / 17400
20	152 / 40,2	300 / 4350	1200 / 17400
25	200 / 52,8	300 / 4350	1200 / 17400
32	370 / 97,8	300 / 4350	1200 / 17400
40	598 / 158	300 / 4350	1200/ 17400
50	875 /231	200 / 2900	800 / 11600

* Safety factor 1:4

PRESSURE DROP

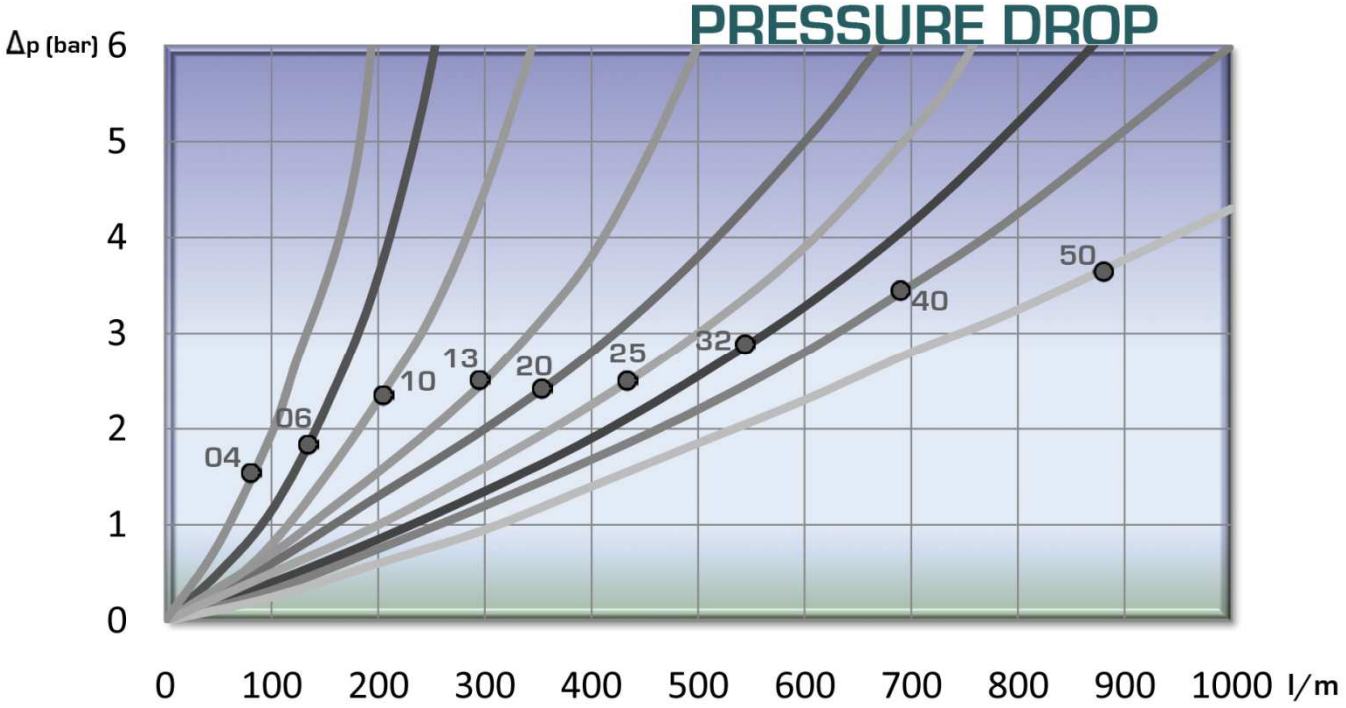

505 SERIES
ATR

BSP
M - F

Designed to avoid returns of the fluid inside the hydraulic circuit.
Metal closing system (without o-ring)
High pressure peak resistance.
Standard opening pressure 5psi. Special opening pressures avaible upon request.

• Materials

Carbon Steel EN10277-3 / Inox AISI 316L

Springs: Carbon Steel DIN 17233/84(B)

O-rings: NBR, Viton or EPDM

• Applications:

Designed for Oil hydraulic Applications according to European Directive 97.23.EC
Special for American market

• Equivalence:

GROMELLE 4000	DMIC CVH
PARKER DC	SNAP TITE CPIFF

• Working temperature (Seals)

	NBR	Viton	EPDM
	+100ºC	+200ºC	+150ºC
	-30ºC	-10ºC	-40ºC

• Sectors: Agricultural, Industrial.

MODEL STRUCTURE

Example;

505. 210008 BI

Series	Material	Closing	O-ring	Opening pressure	Size	Thread
505.	**1** → Carbon St. **2** → AISI 316L	**1** → Poppet V.	**0** → Without **1** → NBR 90Sh **2** → Viton **3** → EPDM	**00** → 0,34Bar/5psi ±0,3 **10**→ 1Bar/ 14psi ±0,3 **25** → 2,5Bar/ 36psi ±0,3 **45** → 4,5Bar/ 65psi ±0,3 **60** → 6Bar/ 87psi ±0,3 **80** → 8Bar/ 115psi ±0,3 **99** → 10Bar/ 145psi ±0,3		2 letter as per Table of threads

	DN
0 → ⅛"	04
1 → ¼"	06
2 → ⅜"	10
3 → ½"	13
4 → ¾"	20
5 → 1"	25
6 →1 ¼"	32
7 →1 ½"	40
8 → 2"	50

505 SERIES
ATR

BSP
M - F

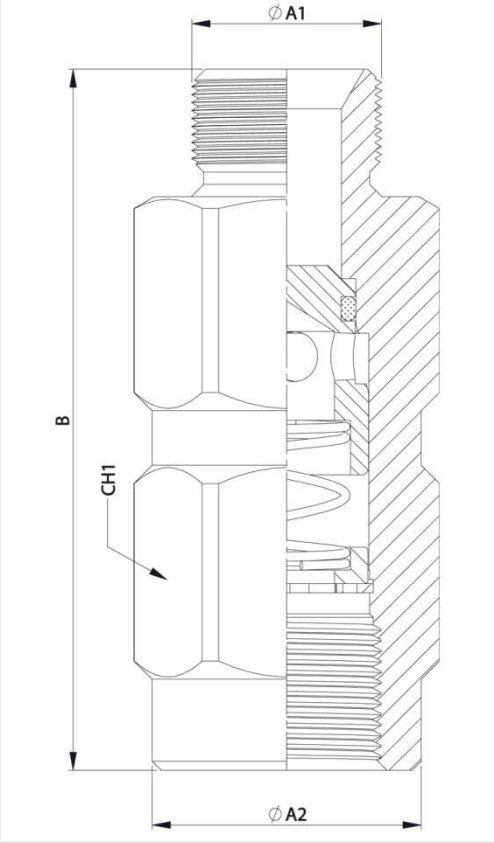

STANDARD MODELS

DN	ØA1	ØA2	REF.		CH1	B
04	⅛" BSP M.	⅛" BSP	505.110000AL		14	44
06	¼" BSP M.	¼" BSP	505.110001AM		19	56
10	⅜" BSP M.	⅜" BSP	505.110002AN		22	70
13	½" BSP M.	½" BSP	505.110003AO	300Bar	30	77
20	¾" BSP M.	¾" BSP	505.110004AP		36	90
25	1" BSP M.	1" BSP	505.110005AQ		46	106
32	1 ¼" BSP M.	1 ¼" BSP	505.110006AR		55	125
40	1 ½" BSP M.	1 ½" BSP	505.110007AS		60	140
50	2" BSP M.	2" BSP	505.110008AT	200Bar	75	160

✶SPECIAL OPTIONS:
ATR Check Valves that require special opening pressures can be delivered upon request by minimum quantities.

505 SERIES
ATR

BSP
M - F

TECHNICAL DATA

DN	Max. Rated Flow	Working Pressure	Max. Working Pressure*
	l/m / GPM	bar / psi	bar / psi
04	8 / 2,11	300 / 4350	1200 / 17400
06	26 / 6,87	300 / 4350	1200 / 17400
10	44 / 11,6	300 / 4350	1200 / 17400
13	90 / 23,85	300 / 4350	1200 / 17400
20	152 / 40,2	300 / 4350	1200 / 17400
25	200 / 52,8	300 / 4350	1200 / 17400
32	370 / 97,8	300 / 4350	1200 / 17400
40	598 / 158	300 / 4350	1200/ 17400
50	875 /231	200 / 2900	800 / 11600

* Safety factor 1:4

PRESSURE DROP

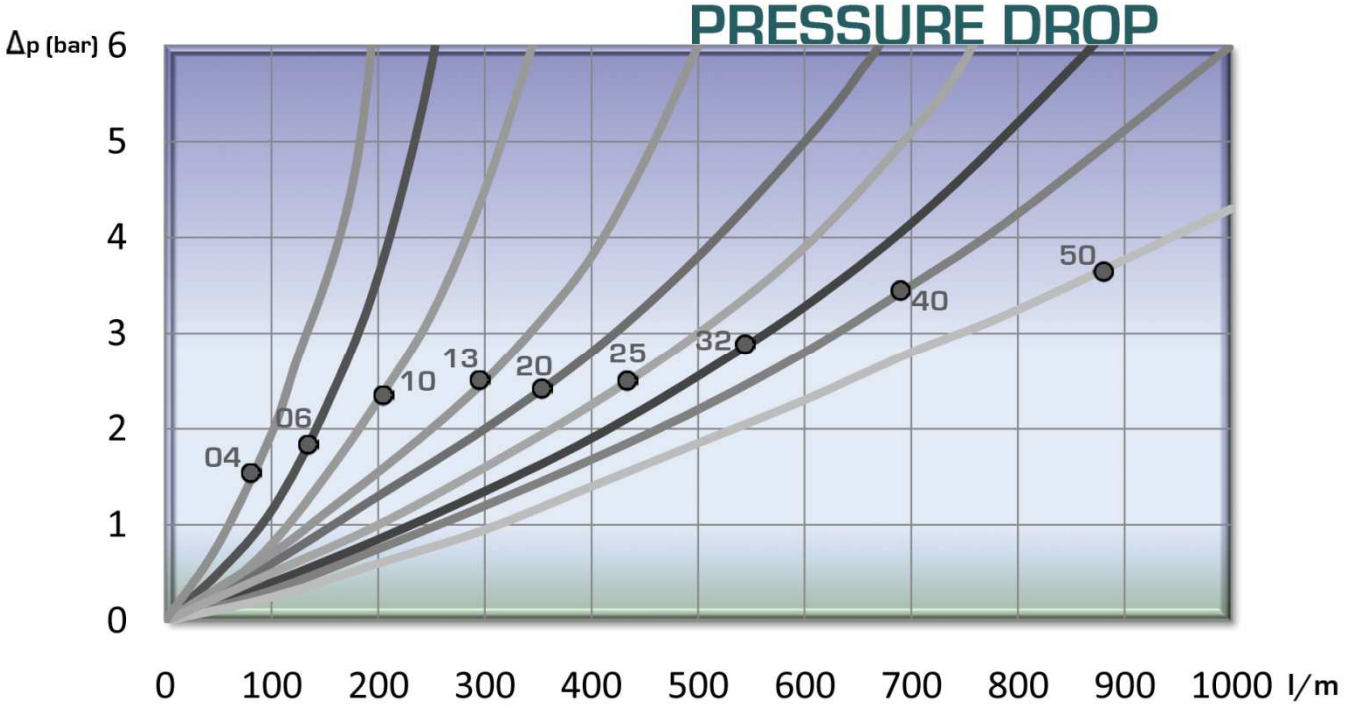

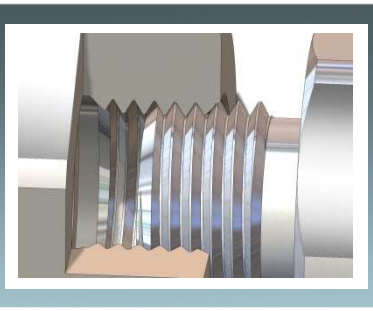

SERIE 999 THREADS

BSP DIN 3852-2 Form A

THREAD	FEMALE	MALE
⅛”	AA	AL
¼”	AB	AM
⅜”	AC	AN
½”	AD	AO
¾”	AE	AP
1”	AF	AQ
1 ¼”	AG	AR
1 ½”	AH	AS
2”	AI	AT
2 ½”	AJ	AU
3”	AK	AV

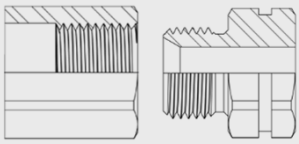

NPTF ANSI B1.20.3

THREAD	FEMALE	MALE
⅛”	BA	BL
¼”	BB	BM
⅜”	BC	BN
½”	BD	BO
¾”	BE	BP
1”	BF	BQ
1 ¼”	BG	BR
1 ½”	BH	BS
2”	BI	BT
2 ½”	BJ	BU
3”	BK	BV

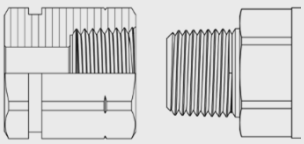

BSPT DIN 3852-2 Form C

THREAD	FEMALE	MALE
⅛”	DA	DL
¼”	DB	DM
⅜”	DC	DN
½”	DD	DO
¾”	DE	DP
1”	DF	DQ
1 ¼”	DG	DR
1 ½”	DH	DS
2”	DI	DT

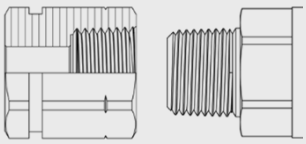

Metric DIN 3852-1 Form B

THREAD	FEMALE	MALE
M8x1	NA	PA
M10x1	NC	PC
M12x1,5	NE	PE
M14x1,5	NF	PF
M16x1,5	NG	PG
M18x1,5	NH	PH
M20x1,5	NK	PK
M22x1,5	NM	PM
M26x1,5	NO	PO
M27x2	NQ	PQ
M33x2	NT	PT
M42x2	NU	PU
M48x2	NV	PV

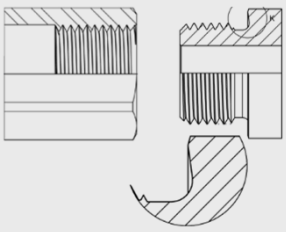

Metric ISO 6149-2 (ORB)

THREAD	FEMALE	MALE
M8x1	EA	OA
M10x1	EC	OC
M12x1,5	EE	OE
M14x1,5	EF	OF
M16x1,5	EG	OG
M18x1,5	EH	OH
M20x1,5	EK	OK
M22x1,5	EM	OM
M27x2	EO	OO
M33x2	EQ	OQ
M42x2	ET	OT
M48x2	EU	OU
M60x2	EV	OV

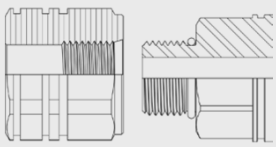

Metric ISO 9974-2 (Tipo E)

THREAD	FEMALE	MALE
M8x1	NA	QA
M10x1	NC	QC
M12x1,5	NE	QE
M14x1,5	NF	QF
M16x1,5	NG	QG
M18x1,5	NH	QH
M20x1,5	NK	QK
M22x1,5	NM	QM
M26x1,5	NO	QO
M27x2	NQ	QQ
M33x2	NT	QT
M42x2	NU	QU
M48x2	NV	QV

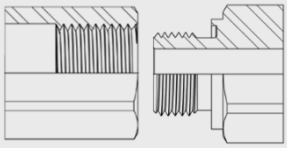

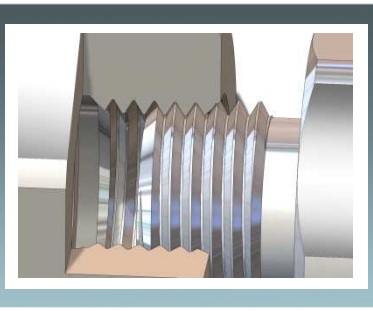

SERIE 999 THREADS

DIN2353

THREAD	L
M12x1,5 6L	JB
M14x1,5 8L	JC
M16x1,5 10L	JD
M18x1,5 12L	JE
M22x1,5 15L	JG
M26x1,5 18L	JI
M30x2 22L	JJ
M36x2 28L	JK
M45x2 35L	JM
M52x2 42L	JN

THREAD	S
M16x1,5 8S	KD
M18x1,5 10S	KE
M20x1,5 12S	KF
M22x1,5 14S	KG
M24x1,5 16S	KH
M30x1,5 20S	KJ
M36x2 25S	KK
M42x2 30S	KL
M52x2 38S	KN

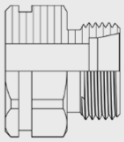

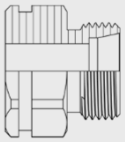

DIN2353 Bulkhead

THREAD	L
M12x1,5 6L	LB
M14x1,5 8L	LC
M16x1,5 10L	LD
M18x1,5 12L	LE
M22x1,5 15L	LG
M26x1,5 18L	LI
M30x2 22L	LJ
M36x2 28L	LK
M45x2 35L	LM

THREAD	S
M16x1,5 8S	MD
M18x1,5 10S	ME
M20x1,5 12S	MF
M22x1,5 14S	MG
M24x1,5 16S	MH
M30x2 20S	MJ
M36x2 25S	MK
M42x2 30S	ML
M52x2 38S	MN

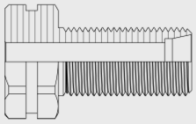

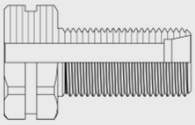

ISO 8434-2 (JIC)

THREAD	FEMALE	MALE
3/8" -24UNF	UA	YA
7/16"-20UNF	UB	YB
½" - 20UNF	UC	YC
9/16"-18UNF	UD	YD
11/16"-16UN	UE	YE
¾"-16UNF	UF	YF
13/16"-16UN	UG	YG
7/8"-14UNF	UH	YH
1 1/16"-12UN	UK	YK
1 3/16"-12UN	UM	YM
1 5/16"-12UN	UO	YO
1 7/16"-12UN	UQ	YQ
1 5/8"-12UN	UT	YT
1 11/16"-12UN	UU	YU
1 7/8"-12UN	UV	YV

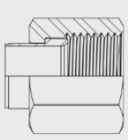

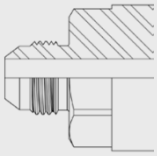

ISO 8434-2 (Bulkhead JIC)

THREAD	FEMALE	MALE
3/8" -24UNF	-	YAP
7/16"-20UNF	-	YBP
½" - 20UNF		YCP
9/16"-18UNF	-	YDP
11/16"-16UN	-	YEP
¾"-16UNF	-	YFP
13/16"-16UN	-	YGP
7/8"-14UNF	-	YHP
1 1/16"-12UN	-	YKP
1 3/16"-12UN	-	YMP
1 5/16"-12UN	-	YOP
1 7/16"-12UN	-	YQP
1 5/8"-12UN	-	YTP
1 11/16"-12UN	-	YUP
1 7/8"-12UN	-	YVP

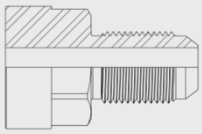

UNF SAE J1926 (ORB)

THREAD	FEMALE SAE J1926-1	MALE SAE J1926-2
3/8" 24UNF	GA	HA
7/16"-20UNF	GB	HB
½" - 20UNF	GC	HC
9/16"-18UNF	GD	HD
11/16"-16UN	GE	HE
¾"-16UNF	GF	HF
13/16"-16UN	GG	HG
7/8"-14UNF	GH	HH
1 1/16"-12UN	GK	HK
1 3/16"-12UN	GM	HM
1 5/16"-12UN	GO	HO
1 7/16"-12UN	GQ	HQ
1 5/8"-12UN	GT	HT
1 11/16"-12UN	GU	HU
1 7/8"-12UN	GV	HV

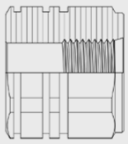

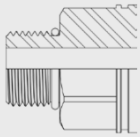

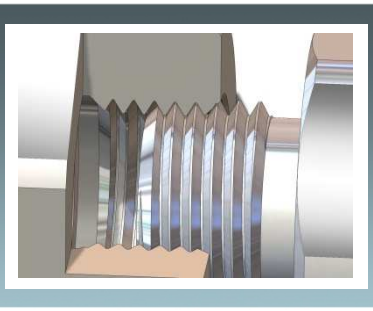

SERIE 999 THREADS

ISO 8434-3 (ORFS)

THREAD	FEMALE	MALE
3/8” -24UNF	VA	ZA
7/16”-20UNF	VB	ZB
½” - 20UNF	VC	ZC
9/16”-18UNF	VD	ZD
11/16”-16UN	VE	ZE
¾”-16UNF	VF	ZF
13/16”-16UN	VG	ZG
7/8”-14UNF	VH	ZH
1 1/16”-12UN	VK	ZK
1 3/16”-12UN	VM	ZM
1 5/16”-12UN	VO	ZO
1 7/16”-12UN	VQ	ZQ
1 5/8”-12UN	VT	ZT
1 11/16”-12UN	VU	ZU
1 7/8”-12UN	VV	ZV

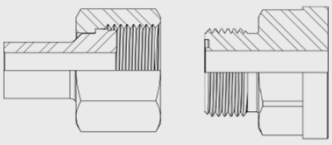

ISO 8434-3 (ORFS Bulkhead)

THREAD	FEMALE	MALE
3/8” -24UNF	-	ZAP
7/16”-20UNF	-	ZBP
½” - 20UNF	-	ZCP
9/16”-18UNF	-	ZDP
11/16”-16UN	-	ZEP
¾”-16UNF	-	ZFP
13/16”-16UN	-	ZGP
7/8”-14UNF	-	ZHP
1 1/16”-12UN	-	ZKP
1 3/16”-12UN	-	ZMP
1 5/16”-12UN	-	ZOP
1 7/16”-12UN	-	ZQP
1 5/8”-12UN	-	ZTP
1 11/16”-12UN	-	ZUP
1 7/8”-12UN	-	ZVP

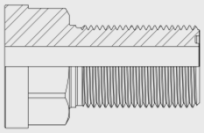

BSP Bulkhead

THREAD	MALE
⅛”	CL
¼”	CM
⅜”	CN
½”	CO
¾”	CP
1”	CQ
1 ¼”	CR
1 ½”	CS
2”	CT

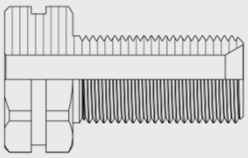

SPECIALS

	THREAD
KFA	M20x1,5 Ø13,5
KFB	M20x1,5 Cone 60º
HFA	¾”-16M. Without 37º
JDA	M16x1,5 Bulkhead M20x1,5
GFA	¾”-16UNF cylinder
JGA	M22x1,5 Prolonged
JGB	M22x1,5 15L Long. Hex 35mm
LGA	M22 Bulkhead Prolonged

INTEVA
www.inteva.es

C/ Berguedà nº 14-16 P.I. Can Bernadés - Subirà
08130 Santa Perpètua de la Mogoda
BARCELONA (SPAIN)
Tel / Phone +34 93 560 79 43
Fax +34 93 574 30 94